OPERATOR'S MANUAL



Model 340, 341, 342
Slush Freezers

Original Operating Instructions

028764−M

1/97 (Original Publication)
(Updated 7/29/2020)

Complete this page for quick reference when service is required:

Taylor Distributor: _____

Address: _____

Phone: _____

Service: _____

Parts: _____

Date of Installation: _____

Information found on the data label:

Model Number: _____

Serial Number: _____

Electrical Specs: Voltage_____ Cycle_____

Phase_____

Maximum Fuse Size: _____ A

Minimum Wire Ampacity: _____ A

Note: *Continuing research results in steady improvements; therefore, information in this manual is subject to change without notice.*

Note: *Only instructions originating from the factory or its authorized translation representative(s) are considered to be the original set of instructions.*

© 1997 Taylor Company
(Updated 7/29/2020)
028764−M

Any unauthorized reproduction, disclosure, or distribution of copies by any person of any portion of this work may be a violation of Copyright Law of the United States of America and other countries, could result in the awarding of Statutory Damages of up to $250,000 (17 USC 504) for infringement, and may result in further civil and criminal penalties.
All rights reserved.

TAYLOR®

Taylor Company
750 N. Blackhawk Blvd.
Rockton, IL 61072

Table of Contents

Section 1: To the Installer

Installer Safety 1-1
Site Preparation 1-1
Air-Cooled Machine. 1-2
Water Connections 1-2
Electrical Connections. 1-2
Beater Rotation 1-3
Refrigerant 1-3

Section 2: To the Operator

Compressor Warranty Disclaimer 2-2

Section 3: Safety

To Operate Safely 3-1

Section 4: Operator Parts Identification

Model 340 4-1
Model 341 4-2
Model 342 4-3
Models 340, 341, 342 Beater Door Assembly (Standard Door/No Prime Plug) 4-4
Model 342 Beater Door Assembly With Self-Closing/Prime Plug Door 4-5
Accessories. 4-7

Section 5: User Interface

Symbol Definitions 5-1
Control Switch. 5-1
Consistency Control 5-1
Indicator Light—Add Mix. 5-1
For Your Information 5-1

Section 6: Operating Procedure

Assembly. 6-1
Freezer Door Assembly Standard Door 6-3
Freezer Door Assembly Self-Closing/ Prime Plug Door 6-5
Sanitizing. 6-8
Priming 6-10
Closing Procedure. 6-11
Draining Product From the Freezing Cylinder. 6-11
Rinsing 6-12
Cleaning 6-12
Disassembly 6-13
Brush Cleaning 6-13

Table of Contents

Section 7: Operator Checklist

During Cleaning and Sanitizing 7-1
Troubleshooting Bacterial Count 7-1
Regular Maintenance Checks. 7-1
Winter Storage 7-2

Section 8: Troubleshooting Guide

Section 9: Parts Replacement Schedule

Section 10: Limited Warranty on Equipment

Section 11: Limited Warranty on Parts

The following information has been included in the manual as safety and regulatory guidelines. For complete installation instructions, please see the Operator's Checklist on page 7-1.

Installer Safety

 ***IMPORTANT!*** *In all areas of the world, the machine should be installed in accordance with existing local codes. Please contact your local authorities if you have any questions.*

Care should be taken to ensure that all basic safety practices are followed during the installation and servicing activities related to the installation and service of Taylor® machines.

- *Only authorized Taylor service personnel should perform installation, maintenance, and repairs on Taylor machines.*
- *Authorized service personnel should consult OSHA Standard 29CFRI910.147 or the applicable code of the local area for the industry standards on lockout/tagout procedures before beginning any installation or repairs.*
- *Authorized service personnel must ensure that the proper personal protective equipment (PPE) is available and worn when required during installation and service.*
- *Authorized service personnel must remove all metal jewelry, rings, and watches before working on electrical equipment.*

 **DANGER!** The main power supply(s) to the machine must be disconnected prior to performing any installation, maintenance, or repairs. Failure to follow this instruction may result in personal injury or death from electrical shock or hazardous moving parts, as well as poor performance or damage to the machine.

Important! *All repairs must be performed by an authorized Taylor service technician.*

 **WARNING!** This machine has many sharp edges that can cause severe injuries.

Site Preparation

Review the area where the machine will be installed before uncrating the machine. Make sure all possible hazards to the user or the machine have been addressed.

 **WARNING**! Only install this machine in a location where its use and maintenance is restricted to trained personnel. Failure to comply may result in personal injury.

For Indoor Use Only: This machine is designed to operate indoors, under normal ambient temperatures of 70°F to 75°F (21°C to 24°C). The freezer has successfully performed in high ambient temperatures of 104°F (40°C) at reduced capacities.

 **WARNING!** This machine must **NOT** be installed in an area where a water jet or hose can be used. **NEVER** use a water jet or hose to rinse or clean the machine. Failure to follow this instruction may result in electrocution.

CAUTION! This machine must be installed on a level surface to avoid the hazard of tipping. Extreme care should be taken in moving this machine for any reason. Two or more persons are required to safely move this machine. Failure to comply may result in personal injury or damage to the machine.

The authorized installer should inspect the machine for damage and promptly report any damage to the local authorized Taylor distributor.

This machine is made using USA sizes of hardware. All metric conversions are approximate and vary in size.

Air-Cooled Machine

Do not obstruct air intake and discharge openings:

Model 340 air cooled machine requires a minimum of 6 in. (152 mm) air space on the front, sides and rear.

Model 342 air cooled machine requires a minimum of 3 in. (76 mm) air space around all sides. Install the deflector to prevent recirculation of warm air.

Failure to allow adequate clearance can reduce the refrigeration capacity of the freezers and possibly cause permanent damage to the compressors.

Water Connections

(Water-Cooled Machine Only)

An adequate cold water supply must be provided with a hand shutoff valve. On the underside rear of the base pan, two 3/8 in. IPS water connections for inlet and outlet have been provided for easy hookup. Permanently connect the machine using ½ in. (12.7 mm) inside diameter water lines. (Flexible lines are recommended, if local codes permit.) Depending on local water conditions, it may be advisable to install a water strainer to prevent foreign substances from clogging the automatic water valve. There will be only one water **in** and one water **out** connection. **Do not** install a hand shutoff valve on the water **out** line. Water should always flow in this order: first, through the automatic water valve; second, through the condenser; and third, through the outlet fitting to an open trap drain.

IMPORTANT! *A backflow prevention device is required on the incoming water connection side. Please see the applicable national, state, and local codes for determining the proper configuration. Water pressure to the unit must not exceed 150 psi (1034 kPa).*

Electrical Connections

In the United States, this equipment is intended to be installed in accordance with the National Electrical Code (NEC), ANSI/NFPA 70-1987. The purpose of the NEC code is the practical safeguarding of persons and property from hazards arising from the use of electricity. This code contains provisions considered necessary for safety. In all other areas of the world, equipment should be installed in accordance with the existing local codes. Please contact your local authorities.

FOLLOW YOUR LOCAL ELECTRICAL CODES.

Each machine requires one power supply for each data label on the machine. Check the data label(s) on the freezer for branch circuit overcurrent protection or fuse, circuit ampacity, and other electrical specifications. Refer to the wiring diagram provided inside of the electrical box for proper power connections.

WARNING! This machine must be properly grounded. Failure to do so can result in severe personal injury from electrical shock.

IMPORTANT! *An equipotential grounding lug is provided with this machine. Some countries require the grounding lug to be properly attached to the rear of the frame by the authorized installer. The installation location is marked by the equipotential bonding symbol (5021 of IEC 60417-1) on both the removable panel and the machine's frame.*



IMPORTANT!

- *Stationary machines which are not equipped with a power cord and a plug or another device to disconnect the machine from the power source must have an all-pole disconnecting device with a contact gap of at least 0.125 in. (3 mm) installed in the external installation.*
- *Machines that are permanently connected to fixed wiring and for which leakage currents may exceed 10 mA, particularly when disconnected or not used for long periods, or during initial installation, shall have protective devices to protect against the leakage of current, such as a GFI, installed by the authorized personnel to the local codes.*
- *Supply cords used with this machine shall be oil-resistant, sheathed flexible cable not lighter than ordinary polychloroprene or other equivalent synthetic elastomer-sheathed cord (code designation 60245 IEC 57) installed with the proper cord anchorage to relieve conductors from strain, including twisting, at the terminals and protect the insulation of the conductors from abrasion.*

If the supply cord is damaged, it must be replaced by an authorized Taylor service technician in order to avoid a hazard. Secure the supply cord ground lead to the machine in a location where if the cord is pulled, the main power leads will become taut before the ground lead can break loose.

Beater Rotation



NOTICE! Beater rotation must be clockwise as viewed looking into the freezing cylinder.

To correct the rotation on a three-phase machine, interchange any two incoming power supply lines at the machine main terminal block only. To correct rotation on a single-phase machine, exchange leads inside the beater motor. (Follow the diagram printed on the motor.)

Electrical connections are made directly to the terminal block provided in the main control box located behind the service panel.

It is recommended that beater rotation adjustment be performed by an authorized Taylor service technician.

Refrigerant



CAUTION! This equipment contains fluorinated greenhouse gases (F-Gas) to provide refrigeration using a hermetically sealed circuit or within foam insulation. This unit's type of gas, quantity, Global Warming Potential (GWP) and CO2 tonnes equivalent information is recorded on the unit's data-label. The refrigerant used is generally considered non-toxic and non-flammable. However any gas under pressure is potentially hazardous and must be handled with caution.

NEVER fill any refrigerant cylinder completely with liquid. Filling the cylinder to approximately 80% will allow for normal expansion



CAUTION! Use only approved refrigerant listed on the unit's data-label or authorized through a manufacturer's technical bulletin. The use of any other refrigerant may expose users and operators to unexpected safety hazards.



WARNING! Refrigerant liquid sprayed onto the skin may cause serious damage to tissue. Keep eyes and skin protected. If refrigerant burns should occur, flush them immediately with cold water. If burns are severe, apply ice packs and contact a physician immediately.



NOTICE! Taylor reminds technicians to be aware of and in compliance with local government laws regarding refrigerant recovery, recycling, and reclaiming systems. For information regarding applicable local laws, please contact your local authorized Taylor distributor.



IMPORTANT! *Refrigerants and their associated lubricants may be extremely moisture absorbent. When opening a refrigeration system, the maximum time the system is open must not exceed 15 minutes. Cap all open tubing to prevent humid air or water from being absorbed by the oil.*

Section 2 To the Operator

The freezer you have purchased has been carefully engineered and manufactured to provide dependable operation. The Taylor Slush Models 340, 341, and 342, when properly operated and cared for, will produce a consistent quality product. Like all mechanical products, these machines will require cleaning and maintenance. A minimum amount of care and attention is necessary if the operating procedures outlined in this manual are followed closely.

This Operator's Manual should be read before operating or performing any maintenance on your equipment.

Your Taylor freezer will **not** eventually compensate and correct for any errors during the set-up or filling operations. Thus, the initial assembly and priming procedures are of extreme importance. It is strongly recommended that personnel responsible for the equipment's operation study these procedures together in order to be properly trained and to make sure that no misunderstandings exist.

In the event you should require technical assistance, please contact your local authorized Taylor Distributor.

Note: *Your Taylor warranty is valid only if the parts are authorized Taylor parts, purchased from the local authorized Taylor distributor, and only if all required service work is provided by an authorized Taylor service technician. Taylor reserves the right to deny warranty claims on machine or parts if unapproved Taylor parts or incorrect refrigerant were installed in the machine, system modifications were performed beyond factory recommendations, or it is determined that the failure was caused by abuse, misuse, neglect, or failure to follow all operating instructions. For full details of your Taylor Warranty, please see the Limited Warranty section in this manual.*

Note: *Constant research results in steady improvements; therefore, information in this manual is subject to change without notice.*



IMPORTANT! *If the crossed-out wheeled-bin symbol is affixed to this machine, it signifies that this machine is compliant with the EU Directives as well as other similar end-of-life legislation in effect after August 13, 2005. Therefore, it must be collected separately after its use is completed and cannot be disposed as unsorted municipal waste.*

The user is responsible for delivering the machine to the appropriate collection facility, as specified by your local code.

For additional information regarding applicable local disposal laws, please contact the municipal waste facility and/or local authorized Taylor distributor.

Compressor Warranty Disclaimer

The refrigeration compressor(s) on this machine are warranted for the term stated in the Limited Warranty section in this manual. However, due to the Montreal Protocol and the U.S. Clean Air Act Amendments of 1990, many new refrigerants are being tested and developed, thus seeking their way into the service industry. Some of these new refrigerants are being advertised as drop-in replacements for numerous applications. It should be noted that in the event of ordinary service to this machine's refrigeration system, **only the refrigerant specified on the affixed data label should be used**. The unauthorized use of alternate refrigerants will void your Taylor compressor warranty. It is the machine owner's responsibility to make this fact known to any technician he employs.

It should also be noted that Taylor does not warrant the refrigerant used in its machines. For example, if the refrigerant is lost during the course of ordinary service to this machine, Taylor has no obligation to either supply or provide its replacement either at billable or unbillable terms. Taylor does have the obligation to recommend a suitable replacement if the original refrigerant is banned, obsoleted, or no longer available during the five-year warranty of the compressor.

Taylor will continue to monitor the industry and test new alternates as they are being developed. Should a new alternate prove, through our testing, that it would be accepted as a drop-in replacement, then the above disclaimer would become null and void. To find out the current status of an alternate refrigerant as it relates to your compressor warranty, call the local Taylor distributor or the Taylor factory. Be prepared to provide the model/serial number of the machine in question.

We at Taylor Company, are concerned about the safety of the operator when he or she comes in contact with the freezer and its parts. Taylor has gone to extreme efforts to design and manufacture built-in safety features to protect both you and the service technician. As an example, warning labels have been attached to the freezer to further point out safety precautions to the operator.

 **DANGER!** Failure to adhere to the following safety precautions may result in severe personal injury or death. Failure to comply with these warnings may also damage the machine and/or its components. Such damage may require component replacement and service repair expenses**.**

To Operate Safely

 **NOTICE! DO NOT** operate the machine without reading this entire manual first. Failure to follow all of these operating instructions may result in damage to the machine, poor performance, health hazards, or personal injury.

 ***IMPORTANT!*** *This machine is to be used only by trained personnel. It is not intended for use, cleaning, or maintenance by children or people with reduced physical, sensory, or mental capabilities, or lack of experience and knowledge. Where limited machine operation is allowed for public use, such as a self-serve application, supervision or instruction concerning the use of the machine by a person responsible for their safety is required. Children should be supervised to ensure that they do not play with the machine.*

 ***IMPORTANT!*** *An equipotential grounding lug is provided with this machine. Some countries require the grounding lug be properly attached to the rear of the frame by the authorized installer. The installation location is marked by the equipotential bonding symbol (5021 of IEC 60417-1) on both the removable panel and the machine's frame.*

 **WARNING!** Avoid injury.

- **DO NOT** operate the machine unless it is properly grounded.
- **DO NOT** operate the machine with larger fuses than specified on the machine's data label.
- All repairs should be performed by an authorized Taylor service technician.
- The main power supplies to the machine must be disconnected prior to performing installation, repairs, or maintenance.
- **For Cord-Connected Machines:** Only authorized Taylor service technicians or licensed electricians may install a plug or replacement cord on the machine.
- Machines that are permanently connected to fixed wiring and for which leakage currents may exceed 10 mA, particularly when disconnected or not used for long periods, or during initial installation, shall have protective devices to protect against the leakage of current, such as a GFI, installed by the authorized personnel to the local codes.
- Stationary machines which are not equipped with a power cord and a plug or another device to disconnect the appliance from the power source must have an all-pole disconnecting device with a contact gap of at least 0.125 in. (3 mm) installed in the external installation.
- Supply cords used with this machine shall be oil-resistant, sheathed flexible cable not lighter than ordinary polychloroprene or other equivalent synthetic elastomer-sheathed cord (code designation 60245 IEC 57) installed with

the proper cord anchorage to relieve conductors from strain, including twisting, at the terminals and protect the insulation of the conductors from abrasion.

- If the supply cord is damaged, it must be replaced by an authorized Taylor service technician in order to avoid a hazard.
- Secure the supply cord ground lead to the machine in a location where if the cord is pulled, the main power leads will become taut before the ground lead can break loose.

Failure to follow these instructions may result in electrocution. Contact your local authorized Taylor distributor for service.

**WARNING!** This machine must **NOT** be installed in an area where a water jet or hose can be used. **NEVER** use a water jet or hose to rinse or clean the machine. Failure to follow this instruction may result in electrocution.

 **WARNING**! Only install this machine in a location where its use and maintenance is restricted to trained personnel. Failure to comply may result in personal injury.

 **WARNING!** Avoid injury.

- **DO NOT** allow untrained personnel to operate this machine.
- **DO NOT** operate the machine unless all service panels and access doors are restrained with screws.
- **DO NOT** remove any internal operating parts (including, but not limited to, the freezer door, beater, or scraper blades), unless all control switches are in the OFF position.

Failure to follow these instructions may result in severe personal injury, especially to fingers or hands, from hazardous moving parts.

 **WARNING!** This machine has many sharp edges that can cause severe injuries.

- **DO NOT** put objects or fingers in the door spout. This may contaminate the product and cause severe personal injury from blade contact.
- **USE EXTREME CAUTION** when removing the beater assembly. The scraper blades are very sharp.

 **CAUTION!** This machine must be placed on a level surface. Extreme care should be taken when moving machine for any reason. Two or more persons are required to safely move this machine. Failure to comply may result in personal injury or damage to the machine.

 ***IMPORTANT!*** *Access to the service area of the machine must be restricted to persons having knowledge and practical experience with the machine, in particular as far as safety and hygiene are concerned.*

 **NOTICE!** Cleaning and sanitizing schedules are governed by your federal, state, or local regulatory agencies and must be followed accordingly. Please refer to the cleaning section of this manual for the proper procedure to clean this machine.

 **CAUTION!** This machine is equipped with a refrigerated cabinet, designed to maintain product temperature at or below 40°F (4.4°C). Before replenishing the mix supply, the product must be refrigerated at or below 40°F (4.4°C). Failure to follow this instruction may result in health hazards and poor freezer performance.

DO NOT run the machine without product. Failure to follow this instruction can result in damage to the

machine.

DO NOT obstruct air intake and discharge openings. A minimum air clearance on both sides of the machine is required.

Models 341/342: 3 in. (76 mm) minimum air space on all sides.

Model 340: 6 in. (152 mm) minimum air space on sides and 0” at the rear. It is recommended to place the rear of the machine against the wall to prevent the recirculation of warm air. Failure to follow this instruction may cause poor freezer performance and damage to the machine.

For Indoor Use Only: This machine is designed to operate indoors, under normal ambient temperatures of 70°F to 75°F (21°C to 24°C). The machine has successfully performed in high ambient temperatures of up to 104°F (40°C) at reduced capacities.

Noise Level: Airborne noise emission does not exceed 78 dB(A) when measured at a distance of 39 in. (1.0 m) from the surface of the machine and at a height of 62 in. (1.6 m) from the floor.

Notes:

Model 340

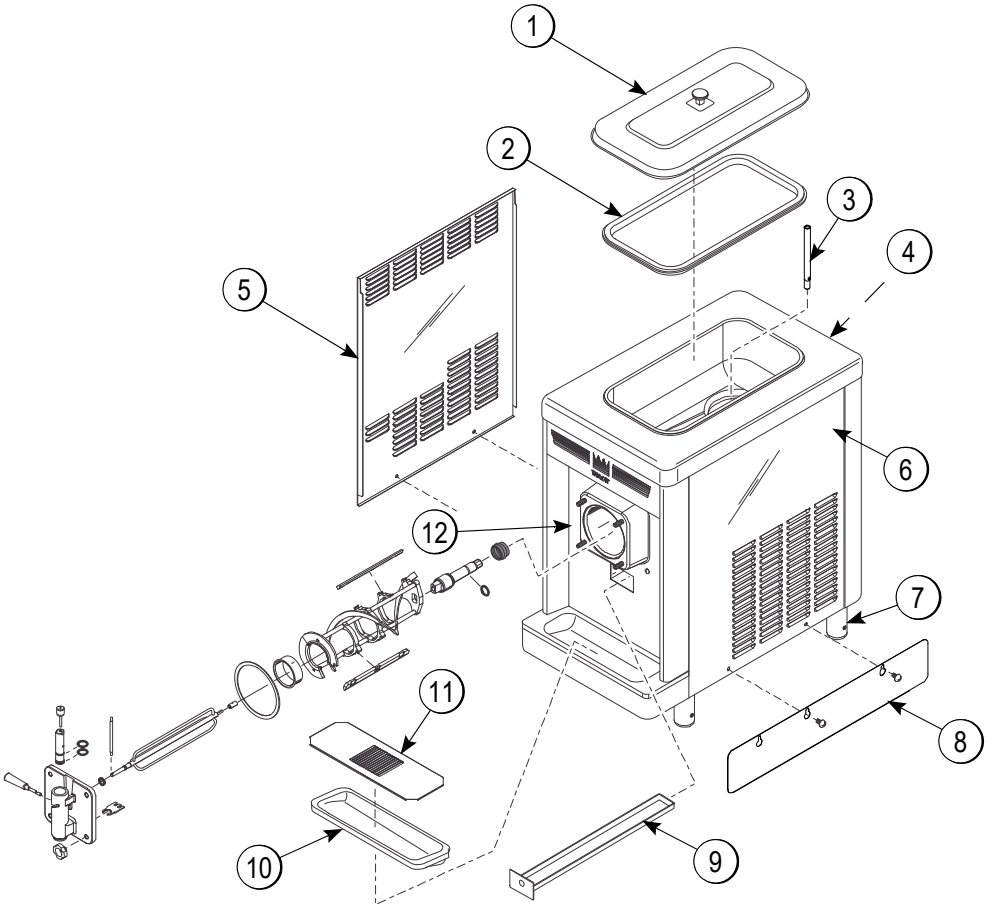

Figure 4-1

Item	Description	Part No.
1	Cover A.− Hopper− STD	X38458−SER
2	Gasket− Hopper Cover	038375
3	Tube− Feed− Non Reverse	015176−9
4	Panel− Rear	047008
5	Panel− Side− Left	068906
6	Panel− Side *Right	068924

Item	Description	Part No.
7	Leg−4.250	013458
8	Skirt− Air Flow	049069
9	Pan− Drip 19−1/2 Long	035034
10	Tray− Drip 14−7/8L X 5−1/8	013690
11	Shield− Splash 18	022763
12	Panel A.− Front	X46881

Note: *Standard door shown (no prime plug)*

Model 341

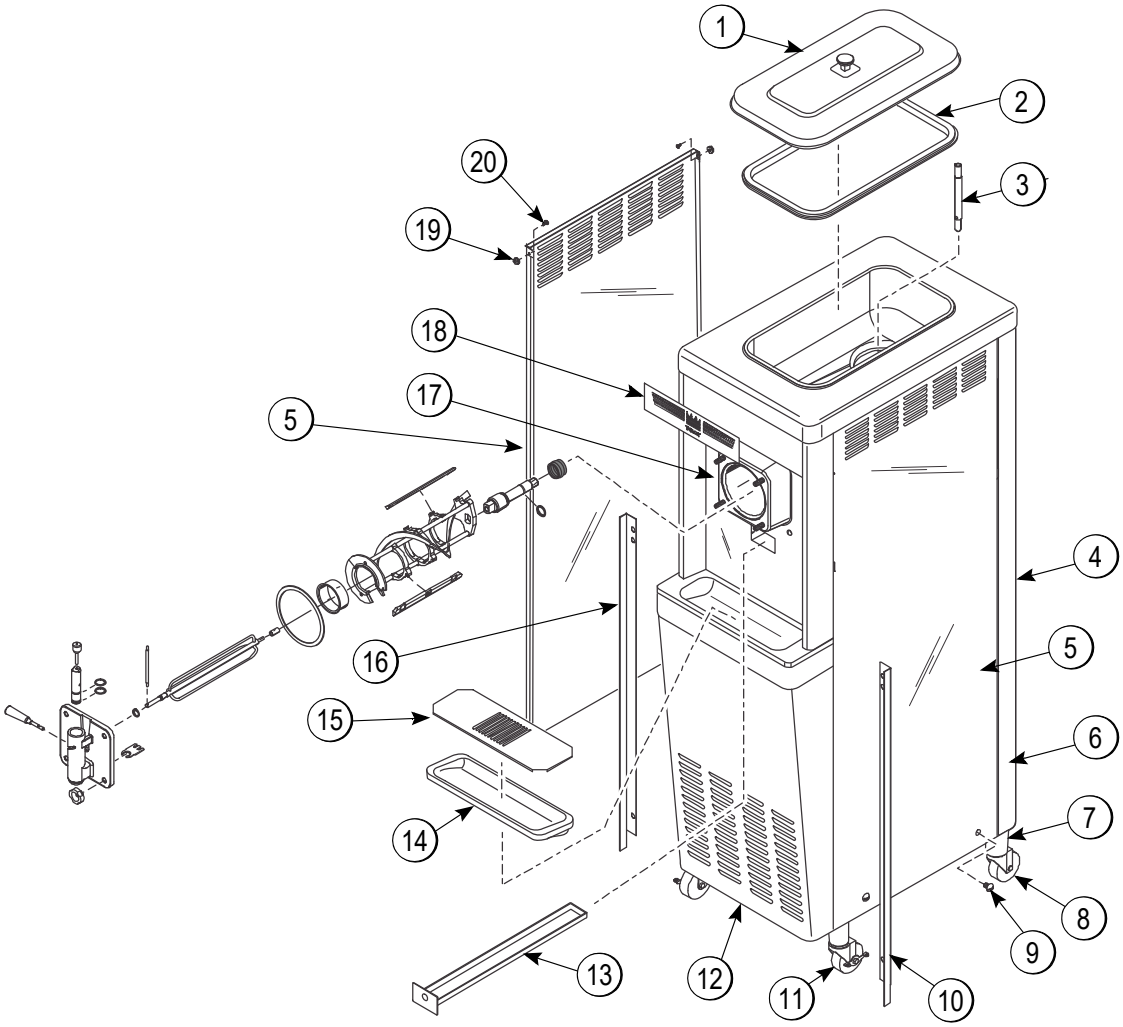

Figure 4-2

Item	Description	Part No.
1	Cover A.−Hopper−Std	X38458−SER
2	Gasket−Hopper Cover	038375
3	Tube−Feed−Non Reverse 3/8 Hole	015176−9
4	Panel−Rear	013637
5	Panel–Side–Left *341*	086295
	Panel–Side–Right *341*	086296
6	Trim−Rear Corner	013620
7	Adaptor A.−Caster	X18915
8	Caster−4 SWV 5/8 Stem X 1-3/8	018794
9	Screw−1/4−20X3/8 SLTD Round	011694
10	Angle−Panel−R	013828

Item	Description	Part No.
11	Caster−4 SWV 5/8 Stem w/Brake	034081
12	Panel-Service	013638-SP1
13	Pan-Drip 19-1/2 Long	035034
14	Tray-Drip 14-7/8L X5-1/8 SGL	013690
15	Shield-Splash 18	022763
16	Angle-Panel-L	013829
17	Panel A.−Front	X46881
18	Decal-Dec	048359
19	Nut-10-32 Whiz Flange Locknut	020983
20	Screw-10-32X1/2 Serrated HWH	020982

Note: *Standard door shown (no prime plug)*

Model 342

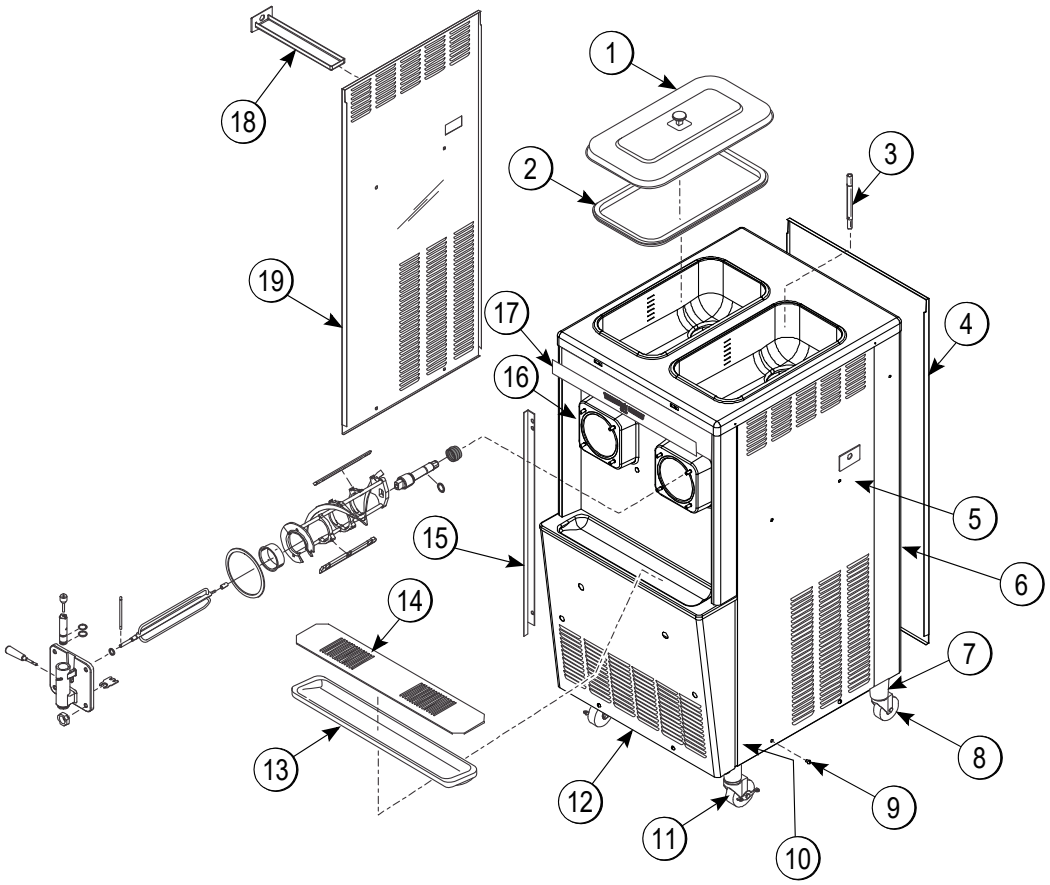

Figure 4-3

Item	Description	Part No.
1	Cover A.−Hopper−STD	X38458−SER
2	Gasket− Hopper Cover−20	038375
3	Tube− Feed− Non Reverse	015176−9
4	Panel− Rear	017563
5	Panel− Side *R	069037
6	Trim− Rear Corner− Right	013663
	Trim− Rear Corner− Left	069040
7	Adapter A.−Caster	X18915
8	Caster−4 SWV 5/8 Stem	018794
9	Screw−1/4−20X3/8 SLTD	011694
10	Angle− Panel− R	013828

Item	Description	Part No.
11	Caster−4 SWV w/Brake	034081
12	Panel− Service	024439−SP1
13	Tray− Drip 22−7/8L X 5−1/8W	014533
14	Shield− Splash	037041
15	Angle− Panel− L	013829
16	Panel A.− Front	X25807
17	Decal− DEC− Taylor	021872
18	Pan− Drip 11−5/8 Long	027503
19	Panel− Side *L	069036

Note: *Standard door shown (no prime plug)*

Models 340, 341, 342 Beater Door Assembly (Standard Door/No Prime Plug)

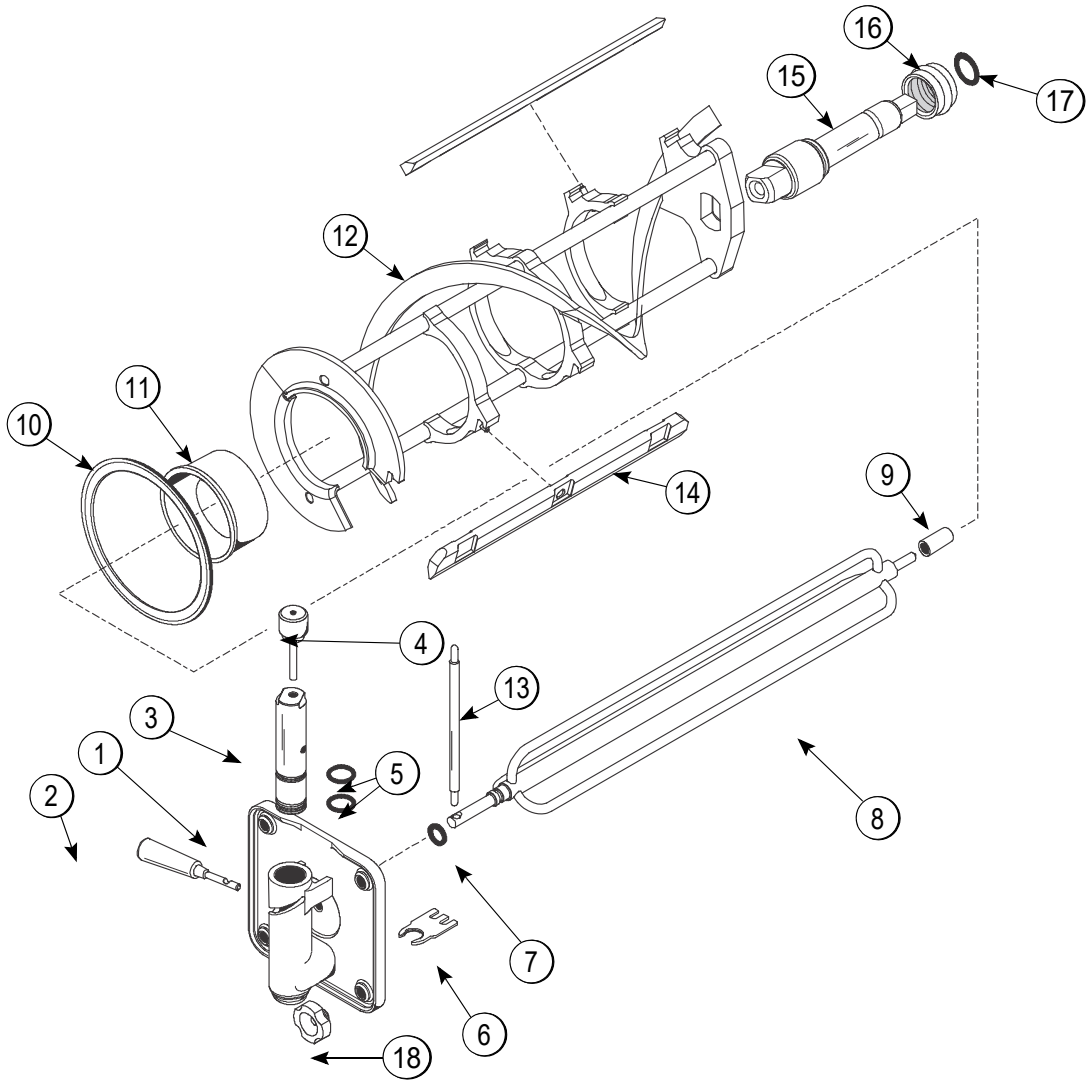

Figure 4-4

Item	Description	Part No.
1	Door A.- Slush- Partial	X83427SER3
2	Handle A.- Draw- Slush	X47384
3	Valve- Draw	047734
4	Pin A.- Valve Handle	X25929
5	O- ring- 1 OD X 0.139 W	032504
6	Buster- Ice	047735
7	O- ring- 0.291 ID X 0.080 W	018550
8	Torque A.	X14488
9	Bearing- Guide	014496
10	Gasket- Door 5.177ID	016672

Item	Description	Part No.
11	Bearing- Front	013116
12	Beater A.-7 QT-1 Pin	X46233
13	Arm- Torque (340/341)	014500
	Arm- Torque (342)	029549
14	Blade- Scraper- Plastic	084950
15	Shaft- Beater	035418
16	Seal- Drive Shaft	032560
17	O- ring- 7/8 OD X 0.139 W	025307
18	Nut- Stud	029880

Model 342 Beater Door Assembly With Self-Closing/Prime Plug Door

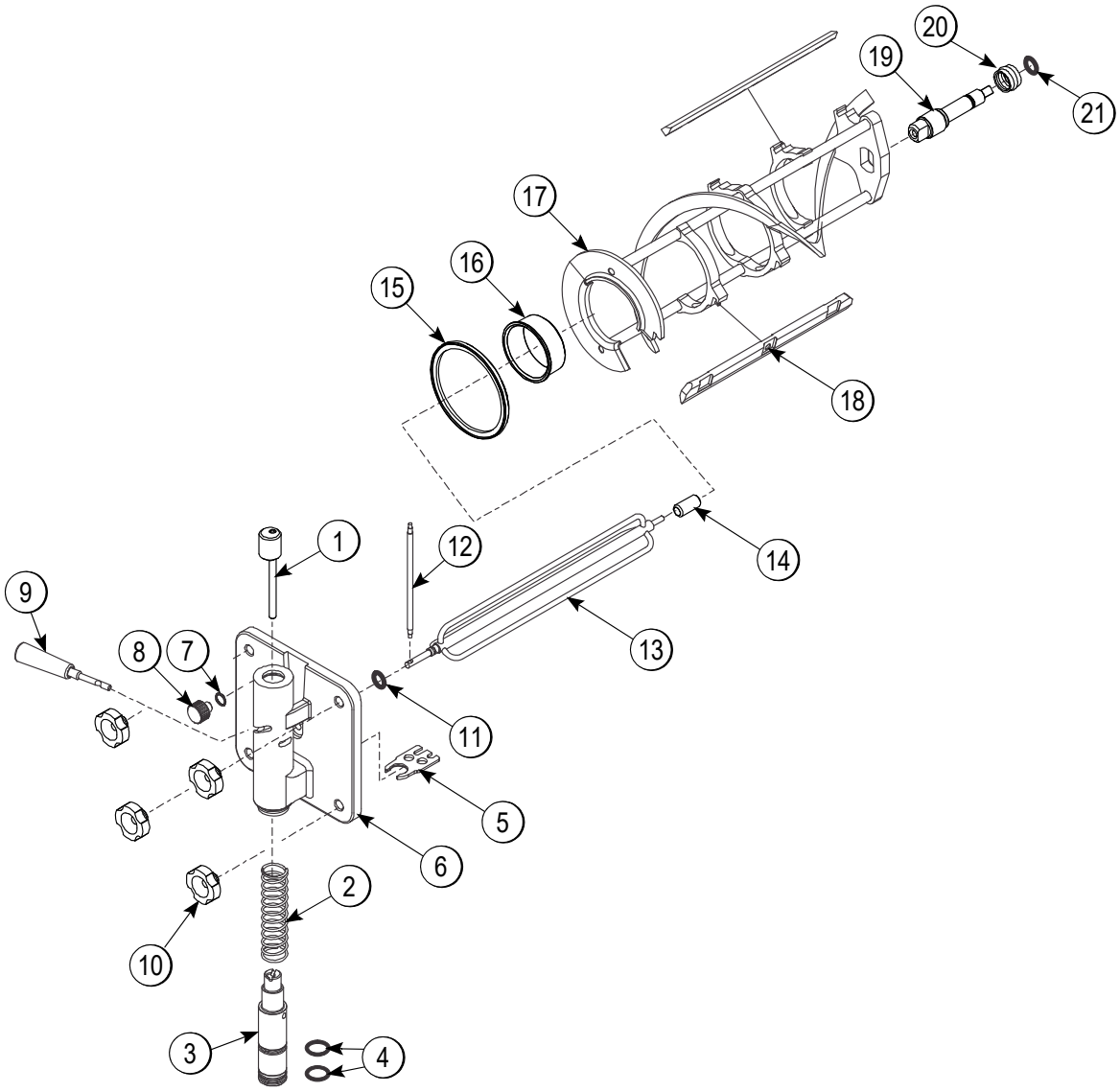

Figure 4-5

Model 342 Beater Door Assembly With Self-Closing/Prime Plug Door

Item	Description	Part No.
1	Pin- Handle- Valve	X83812
2	Spring- COMP.970X.082	030344
3	Valve- Draw- SLF CLO	080662
4	O- ring- 1OD X0.139W	032504
5	Buster- Ice	047735
6	Door A.- Partial S/N M4106402 & Up	X83427-SER
	Door w/Pin & Valve S/N Prior to M4106401	X83427SSP
7	O- ring- 0.563 OD X 0.070W	043758
8	Plug- Prime- STNLS	050405
9	Handle A.- Draw- Slush	X47384
10	Nut- Stud	029880

Item	Description	Part No.
11	O- ring-0.291 ID X.080W	018550
12	Arm- Torque	029549
13	Torque A.	X14488
14	Bearing- Guide	014496
15	Gasket- Door 5.177ID	016672
16	Bearing- Front	013116
17	Beater A.- 7QT- 1 Pin	X46233
18	Blade- Scraper- Plastic	084950
19	Shaft- Beater	035418
20	Seal- Drive Shaft	032560
21	O- ring- 7/8 OD X 0.139W	025307

Accessories

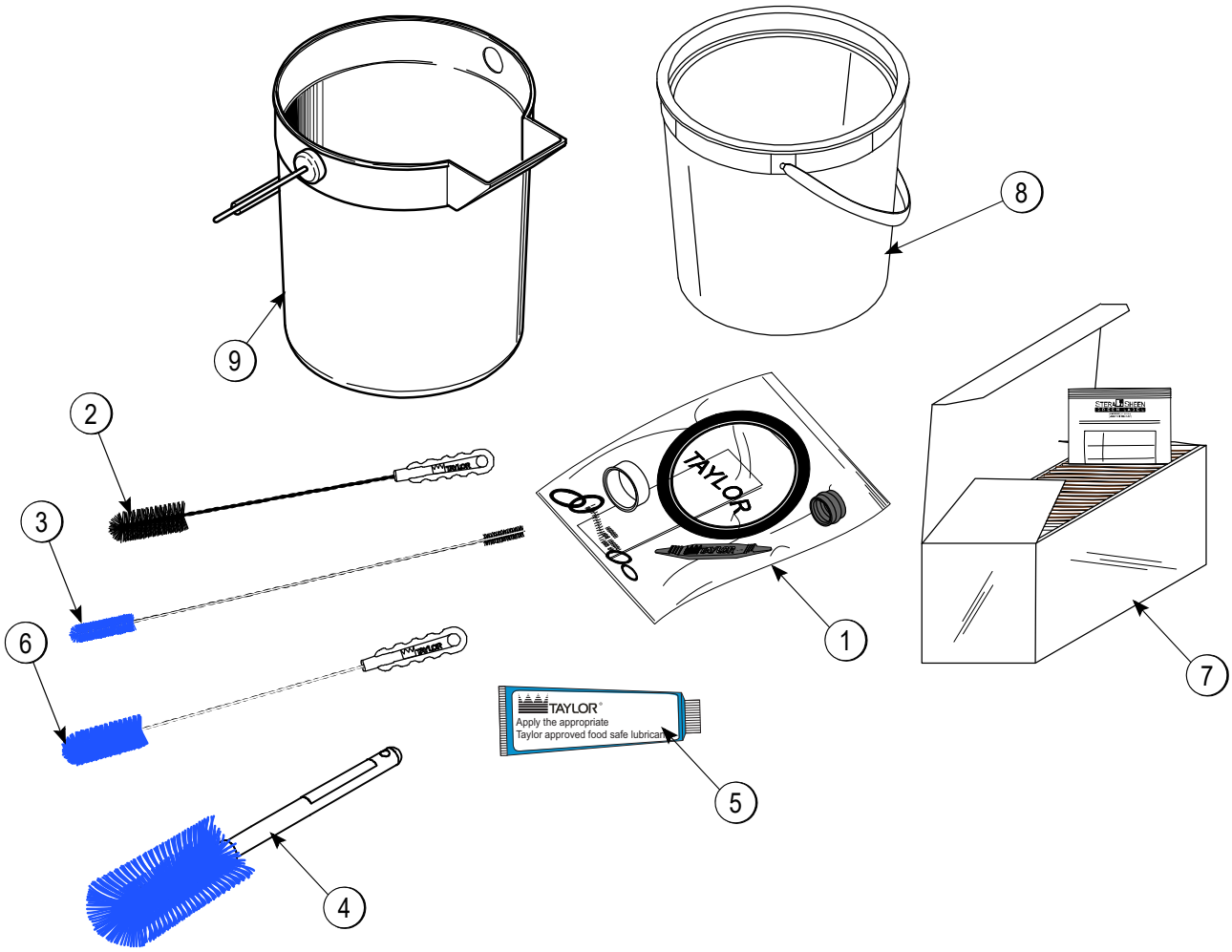

Figure 4-6

Item	Description	Part No.
1	Kit A.−Tune Up (STD 340, 341, 342 Machine)	X39969−1
	Kit A.−Tune Up− Torque (342 Prime Plug, Self− Closing Door Machine)	X50413
2	Brush− Rear BRG 1IN.DX2IN.LG X 14	013071
3	Brush− Double Ended	013072
4	Brush− Mix Pump Body−3X7	023316

Item	Description	Part No.
5	Lubricant− Taylor 4 OZ	047518
6	Brush− Draw Valve 1OD X 2X17	013073
7	Sanitizer− Stera Sheen−Green	055492
8	Pail−6 qt. (340 Unit)	023348
9	Pail−10 qt. (341 & 342 Machine)	013163

Notes:

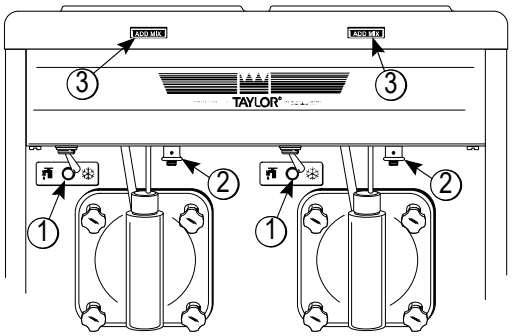

Figure 5-1

Table 5-1

Item	Description
1	Control Switch
2	Consistency Control
3	Indicator Light - Add Mix

Note: *Standard Door Shown (No Prime Plug)*

Symbol Definitions

To better communicate in the international arena, the words on many of our operator switches and buttons have symbols to indicate their functions. Taylor equipments are designed with these international symbols.

The following chart identifies the symbol definitions used on the operator switches.

= ON/AUTO

= OFF

= WASH

Control Switch

The center position is OFF. The left position is WASH, which activates only the beater motor. The right position is AUTO, which activates the beater motor and the refrigeration system.

Consistency Control

The viscosity (thickness) of the slush is controlled by a sensing device called the consistency control. The consistency control knob is located under the control channel. To achieve a thicker slush, turn the knob **clockwise** and **counterclockwise** to achieve a thinner slush consistency.

Allow the refrigeration system to cycle on and cycle off two or three times before an accurate consistency can be evaluated.

Indicator Light—Add Mix

A mix level indicating light is located on the front of the machine. When the light is on, it indicates that the mix hopper has a low supply of mix and should be refilled as soon as possible. If mix is not added, a freeze-up may occur, causing eventual damage to the beater, blades, drive shaft, and freezer door.

For Your Information

The Models 340 and 341 come equipped with an optional rack assembly and four syrup jars. Each syrup jar holds 16 ounces (453.6 grams) of syrup. One pump stroke will dispense 1/4 ounce (7 grams) of syrup.

Because of the many different types of syrups on the market today, the syrup to slush ratio will vary. Consult the label or manufacturer for the proper amount of syrup for the desired drink size.

To serve slush product, simply add the flavor and open the draw valve. The slush product should blend with the syrup with no stirring necessary. If it does not, the product is too thick and the consistency control should be adjusted to a thinner consistency.

Notes:

Model 341 has been selected to illustrate the pictured step-by-step operating procedures for the models contained in this manual. Each machine has a 20 qt. (18.9 L) mix hopper and the freezing cylinder holds 7 qt. (6.6 L) of slush product. Model 342 has two mix hoppers and two freezing cylinders. Therefore, duplicate the procedures (where applicable) for the second side of Model 342.

Note: *Model 342 comes equipped with two door options: a standard door without a prime plug or a self-closing door with a prime plug. Follow the appropriate assembly procedures for your style door.*

We begin our instructions at the point where we enter the store in the morning and find the parts disassembled and laid out to air dry from the previous night's brush cleaning.

These opening procedures will illustrate how to assemble these parts into the freezer, sanitize them, and prime the freezer with slush base in preparation to serve the first portion.

If you are disassembling the machine for the first time or need information to get to this starting point in our instructions, turn to Disassembly on page 6-13, and start there.

Assembly

WARNING! Make sure the power switch is in the OFF position. Failure to follow this instruction may result in severe personal injury from hazardous moving parts.

Note: *When lubricating parts, use an approved food grade lubricant (example: Taylor Lube).*

1. Slide the O-ring into the first groove on the drive shaft. Lubricate the groove, O-ring, and shaft portion that comes in contact with the bearing on the beater drive shaft.

   Do not lubricate the square end of the drive shaft. Slide the seal over the shaft and groove until it snaps into place. Fill the inside portion of the seal with 1/4 more lubricant and evenly lubricate the flat side of the seal that fits onto the rear shell bearing.

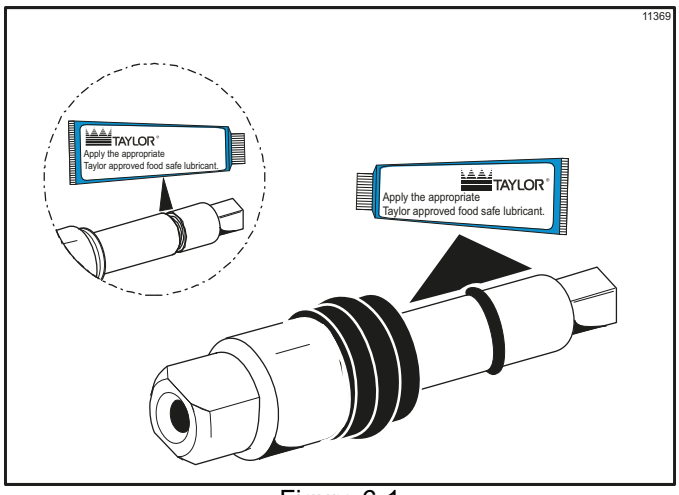

Figure 6-1

2. Insert the drive shaft into the freezing cylinder, (square end first) and into the rear shell bearing, until the seal fits securely over the rear shell bearing. Be certain the drive shaft fits into the drive coupling without binding.

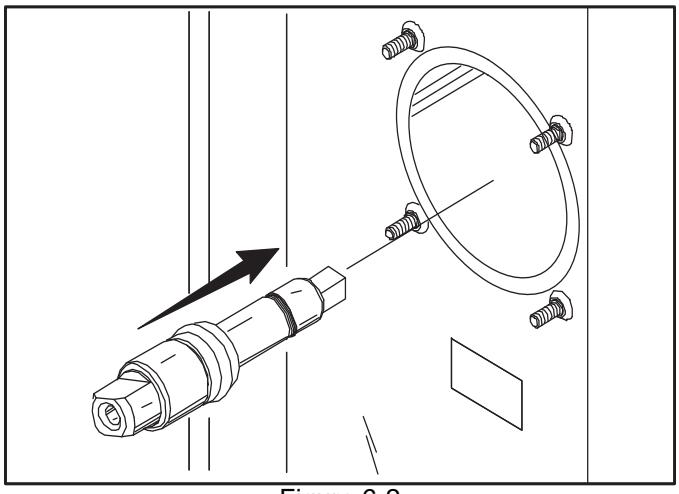
Figure 6-2

3. Before installing the beater assembly, inspect the scraper blades.

   Check the scraper blades for any signs of wear or damage. If a scraper blade is nicked or worn, replace both blades.

4. If the blades are in good condition, place the rear scraper blade over the rear holding pin (knife edge to the outside). Holding the blade on the beater, turn it over and install the front blade the same way.

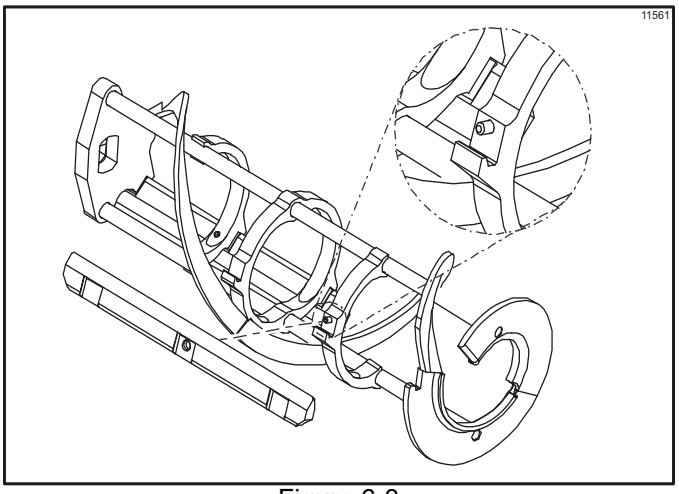

Figure 6-3

Note: *The hole on the scraper blade must fit securely over the pin to prevent costly damage.*

5. Holding the blade in position, insert the beater assembly into the freezing cylinder and slide it into position over the drive shaft. Turn the beater slightly to be certain that the beater is properly seated. When in position, the beater will not protrude beyond the front of the freezing cylinder.

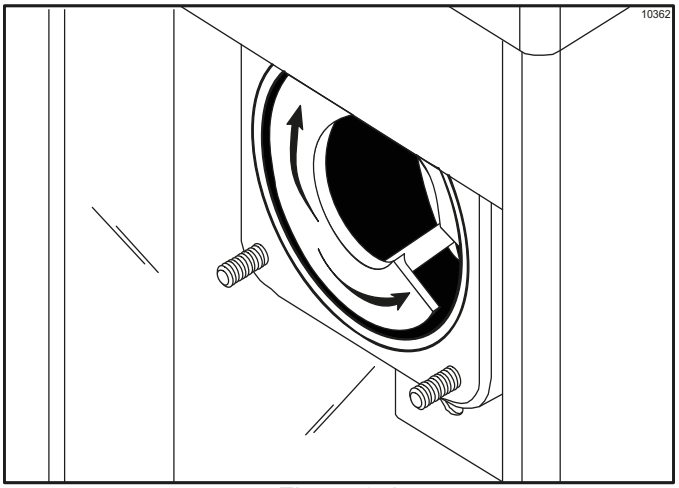

Figure 6-4

6. Slide the O-ring into the groove on the front of the shaft and lubricate these parts to prevent leaking. Place the white, plastic guide bearing on the rear of the rotor shaft. **Do not** lubricate the guide bearing.

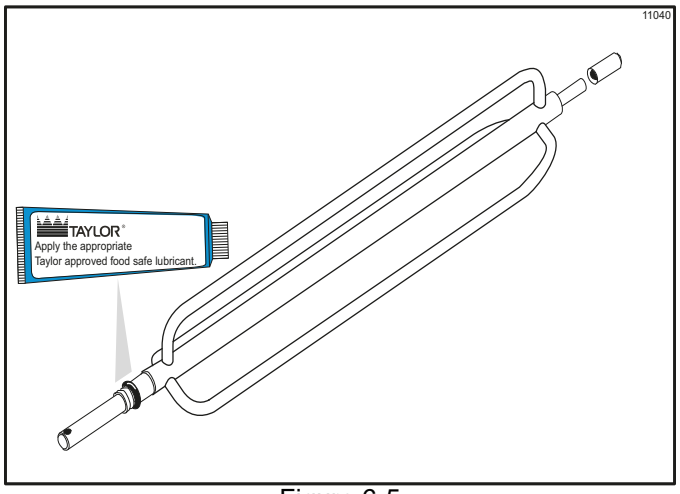

Figure 6-5

7. Insert the torque rotor shaft, plastic bearing end first, making sure that it fits into the hole in the beater drive shaft. Rotate it several times to check for proper positioning.

   The hole in the torque rotor shaft should be in the 12 o'clock position.

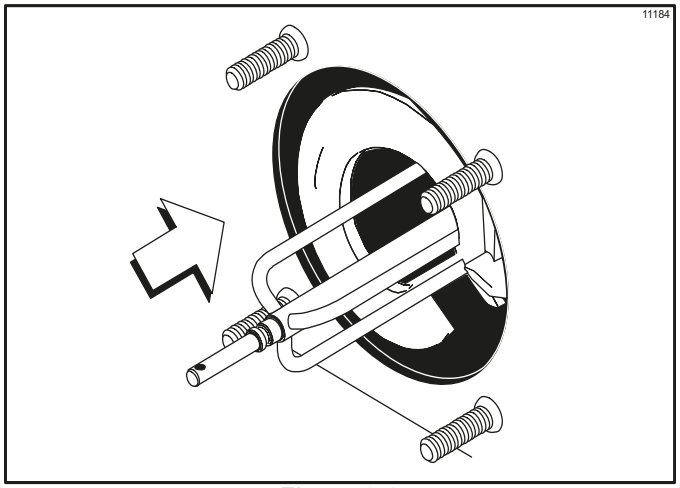

Figure 6-6

8. Before assembling the freezer door, check the following for any nicks, cracks, or signs of wear: door bearing, door gasket, draw valve, O−rings, and all sides of the door assembly, including the inside of the draw valve bore. Replace any damaged parts.

Freezer Door Assembly Standard Door

(No Prime Plug)

Note: *Model 342 comes equipped with two door options: a standard door without a prime plug or a self-closing door with a prime plug. Follow the appropriate assembly procedures for your style door. (To assemble Model 342 self-closing door with prime plug, go to page 6-5 and perform Steps 1 to19).*

1. To assemble the door with the ice buster (door spout clearing device), install the O-rings on the draw valve and lubricate.

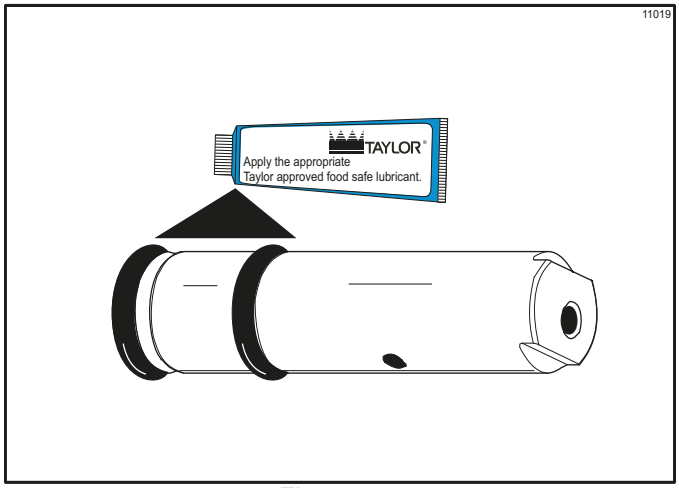

Figure 6-7

2. Insert the draw valve into the door, leaving approximately 1/2 of the valve sticking out the top of the door.

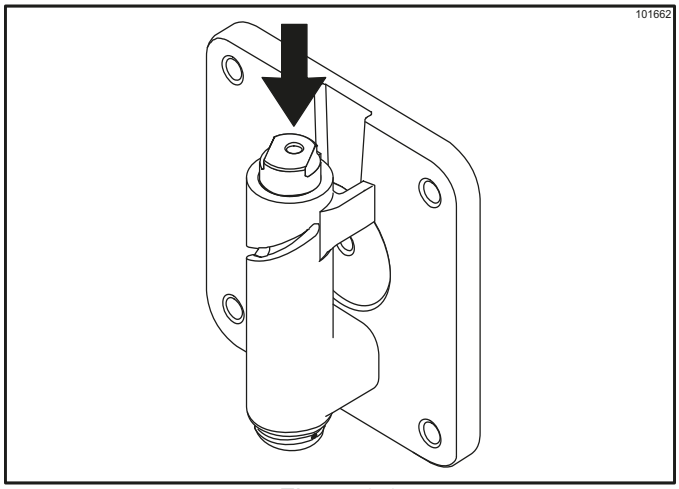

Figure 6-8

3. Rotate the draw valve so the flats on the top of the draw valve are perpendicular to the door face.

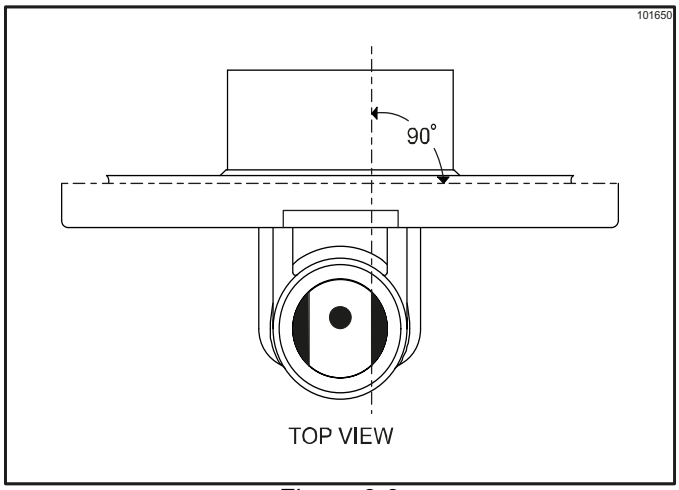

Figure 6-9

4. Insert the ice buster through the door spout and into the slot located just above the lower O-ring.

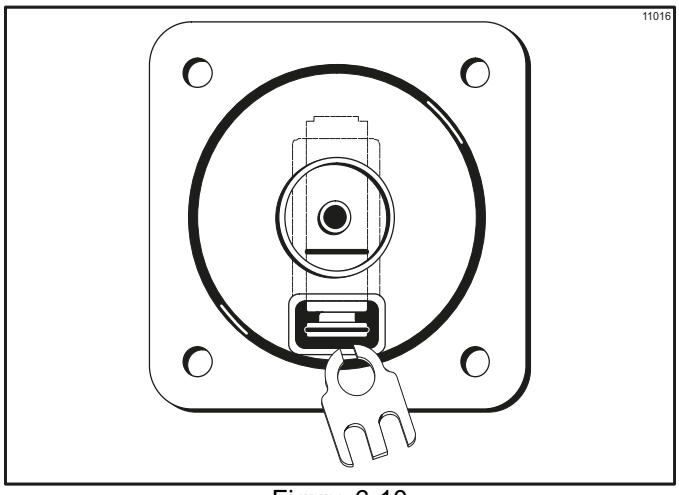

Figure 6-10

5. With the ice buster in place, rotate the draw valve to allow installation of the draw handle. This will lock the ice buster in place. Install the draw handle pin, and close the draw valve by moving the handle to the left.

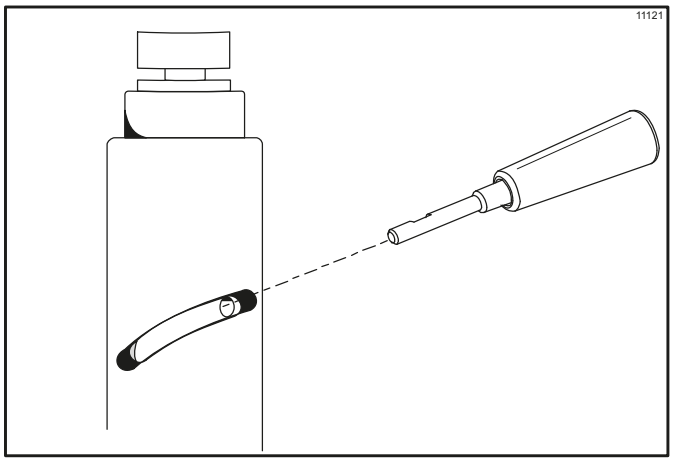

Figure 6-11

6

6. Place the large rubber gasket into the groove on the back side of the freezer door.

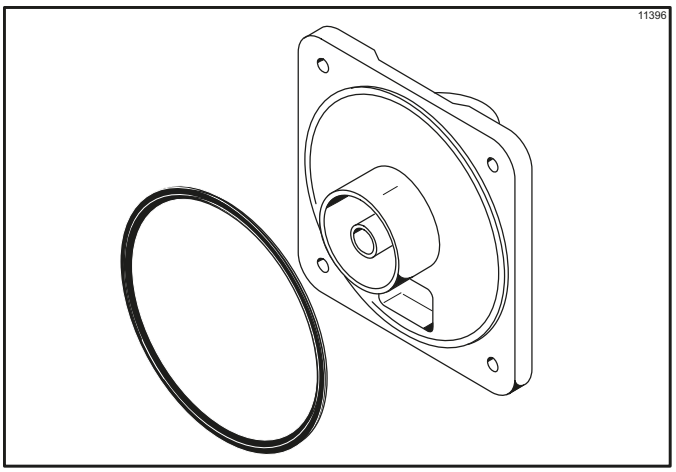

Figure 6-12

7. Slide the white, plastic front bearing onto the bearing hub, making certain that the flanged end of the bearing is resting against the freezer door. **Do not** lubricate the door gasket or front bearing.

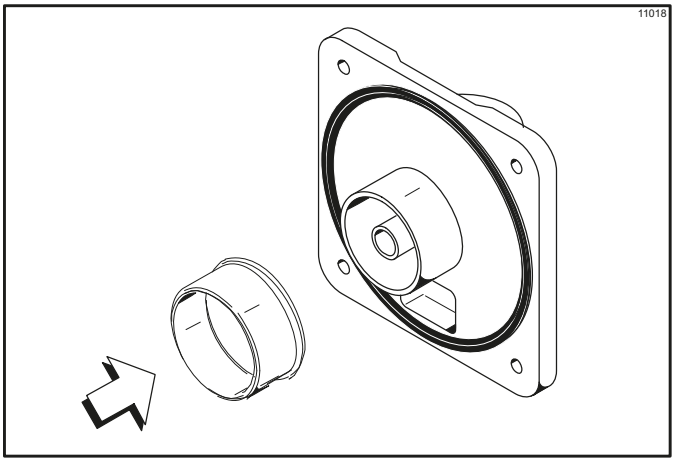

Figure 6-13

8. Place the front end of the baffle into the hole in the center of the door. Position the door onto the four studs on the front of the freezing cylinder and push the door into place. Install the four handscrews onto the studs and tighten them equally in a crisscross pattern to insure that the door is snug. **Do not** over tighten the handscrews.

   Note: *If the freezer door does not fit into place easily, position the open end of the beater assembly in the 11 o'clock position.*

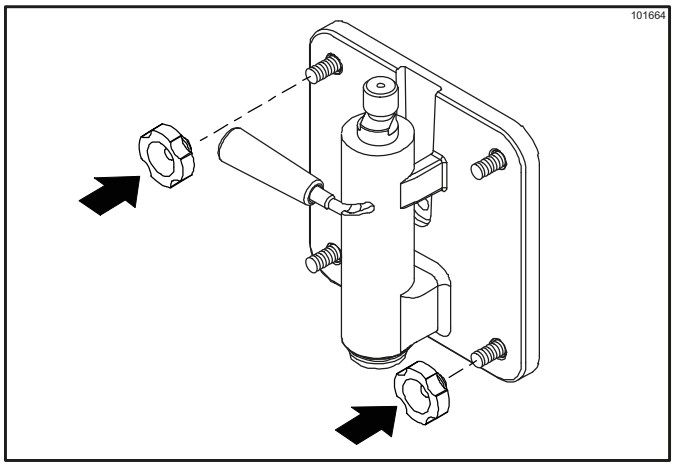

Figure 6-14

9. Rotate the baffle assembly so the hole in the end of the shaft is vertical. Insert the torque arm between the draw valve spout supports and into the hole in the baffle assembly.

   Note: *During operation, the torque arm rests on the spout support.*

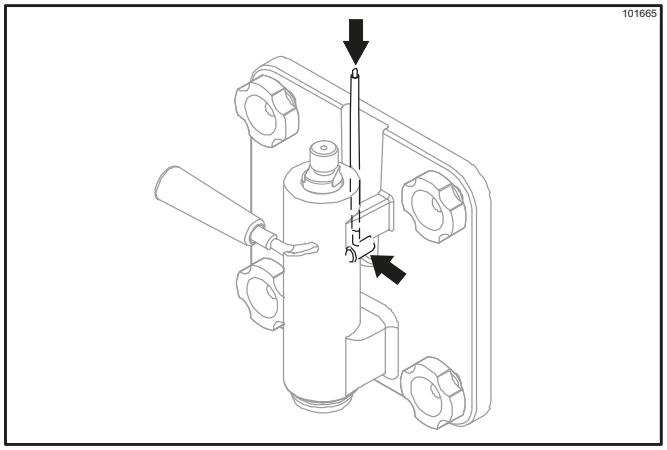

Figure 6-15

10. Install the long drip pan into the hole in the front panel. Install the restrictor cap (if applicable).

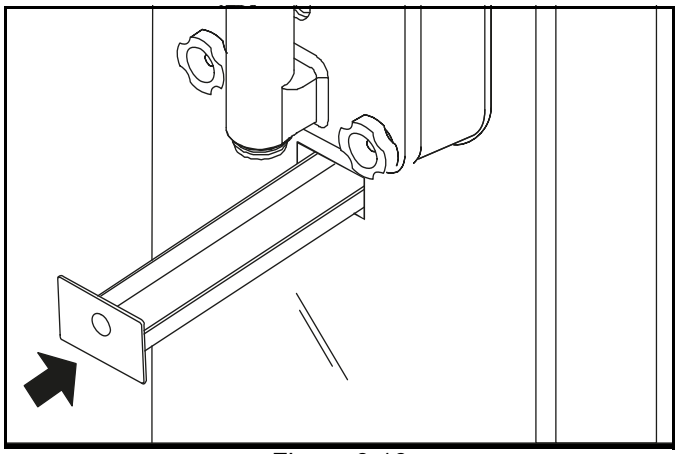

Figure 6-16

Freezer Door Assembly Self-Closing/ Prime Plug Door

(Model 342 Option Only)

Note: *Model 342 comes equipped with two door options: a standard door without a prime plug or a self-closing door with a prime plug. Follow the appropriate assembly procedures for your style door. (To assemble the standard door (has no prime plug), go to page 6-1 and perform Steps 1 to10).*

1. Install the O-rings on the draw valve and lubricate.

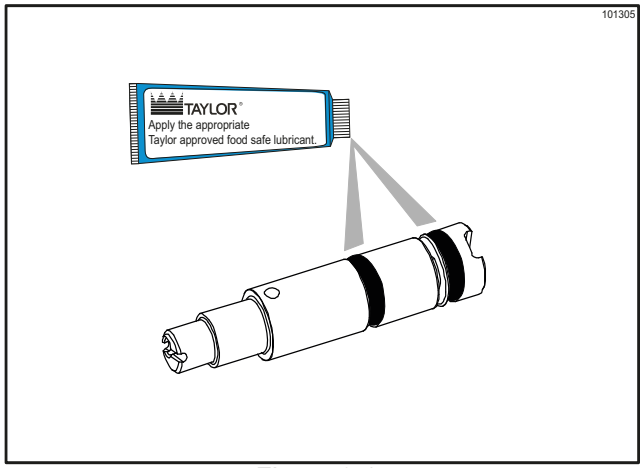

Figure 6-17

2. Turn the door upside down. Insert the spring.

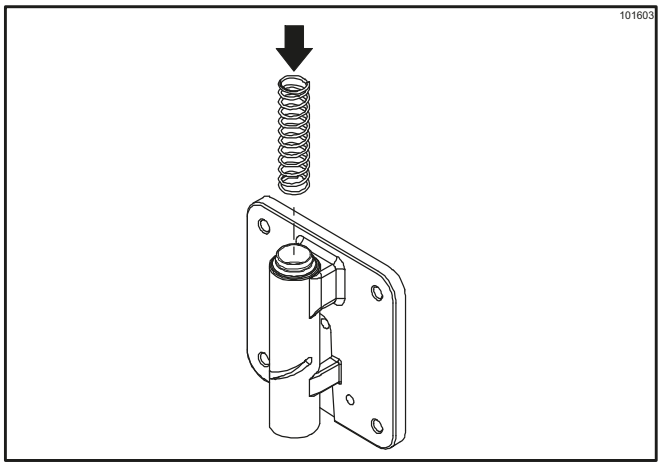

Figure 6-18

3. Insert the draw valve into the door. Line up the small hole on each side of the draw valve with the slot on each side of the door spout.

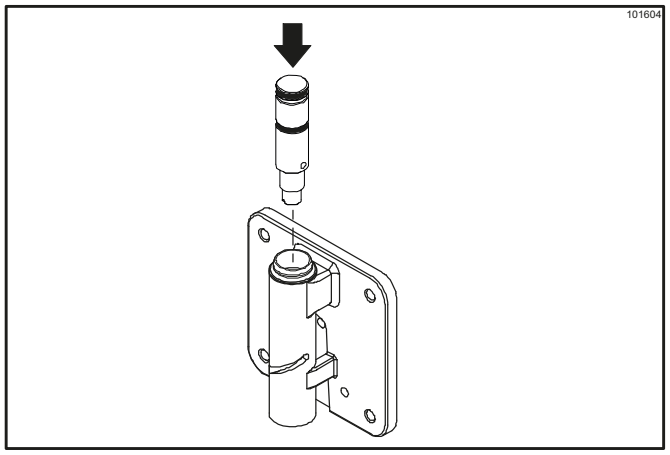

Figure 6-19

4. Apply firm downward pressure on the draw valve and center the draw valve hole in the small slot on the left side of the spout. Insert the draw valve handle through the slot and into the draw valve hole

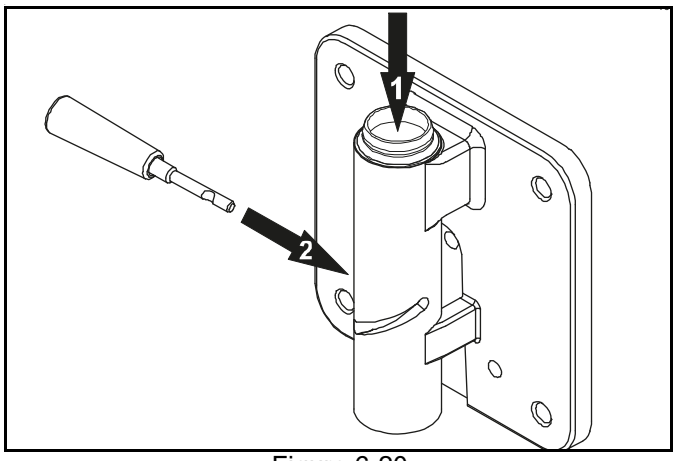

Figure 6-20

5. Move the draw handle to the forward position to allow installation of ice buster.

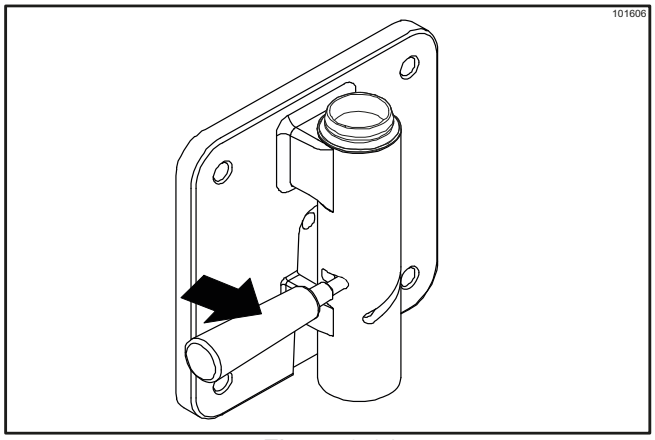

Figure 6-21

6. From the back of the door, install the ice buster through the door spout and into the slot located just above the lower O-ring.

6

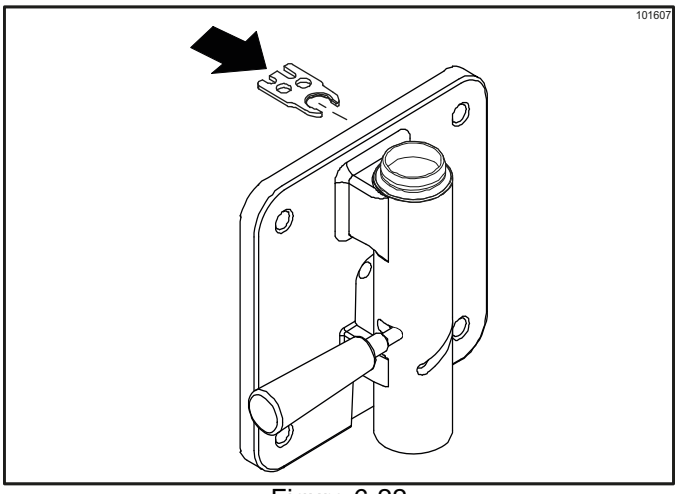

Figure 6-22

7. Move the draw handle to the back position to lock the ice buster in place.

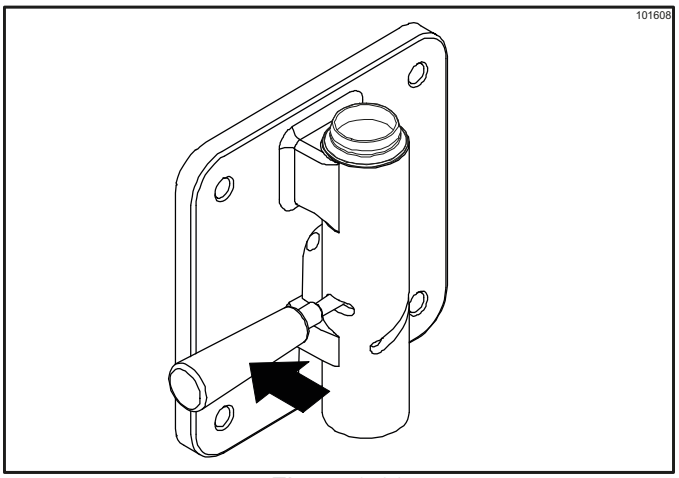

Figure 6-23

8. Turn the door right side up. Remove the draw valve handle. Install it on the other side, through the longer slot and into the draw valve hole.

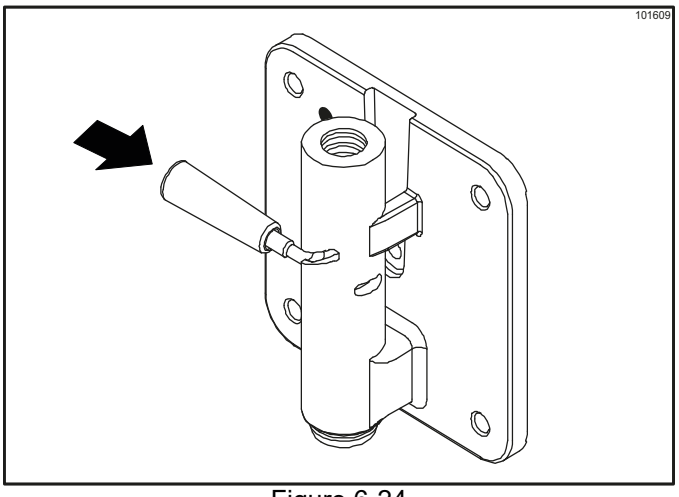

Figure 6-24

9. Insert the valve handle pin. Turn the pin and the draw valve handle until the pin drops completely into place.

   Note: *While turning the draw valve handle, it may be necessary to pull the draw valve handle back slightly to allow the pin to fall in place.*

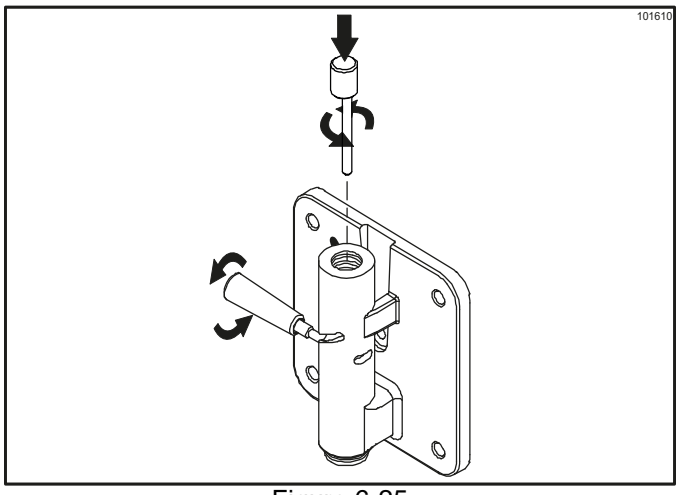

Figure 6-25

10. Place the O-ring onto the prime plug and lubricate.

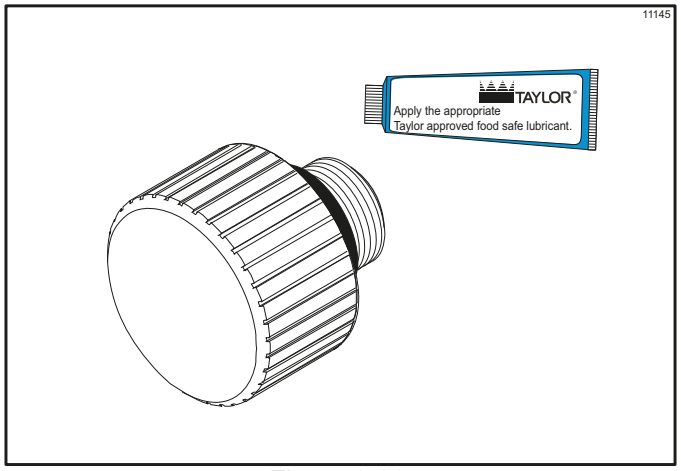

Figure 6-26

11. Screw the prime plug into position on the front of the door.

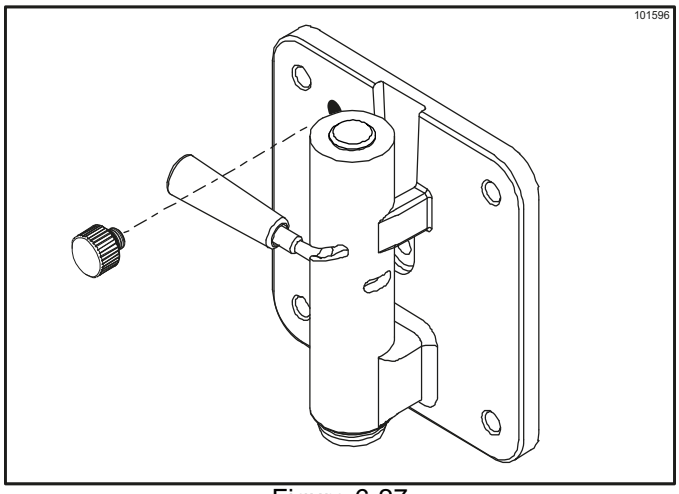

Figure 6-27

12. Place the large rubber gasket into the groove on the back side of the freezer door

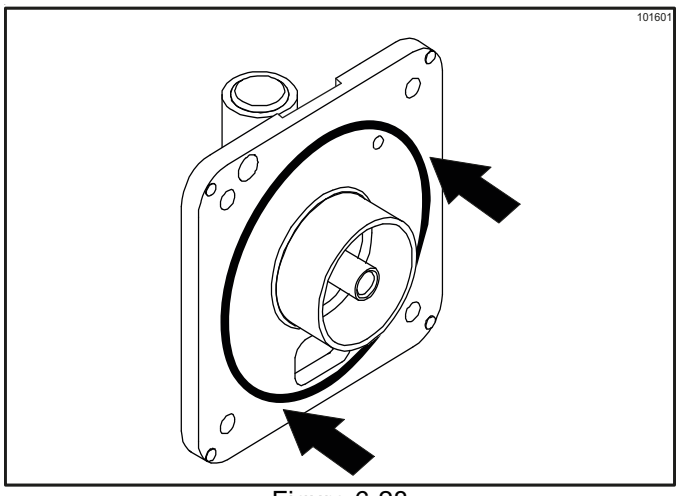

Figure 6-28

13. Slide the white, plastic front bearing onto the bearing hub, making certain that the flanged end of the bearing is resting against the freezer door. **Do not** lubricate the door gasket or front bearing.

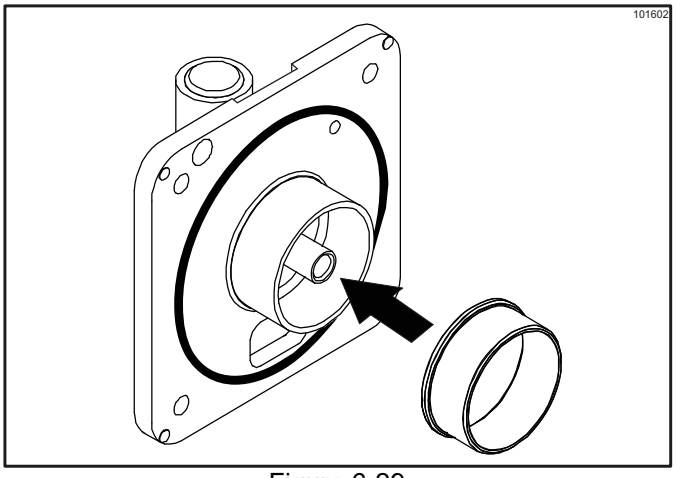

Figure 6-29

14. Position the freezer door onto the four studs on the front of the freezing cylinder and push the door into place. Install the four handscrews onto the studs and tighten them equally in a crisscross pattern to ensure that the door is snug. **Do not** over-tighten the handscrews.

    Note: *If the freezer door does not fit into place easily, position the open end of the beater assembly in the 11 o'clock position.*

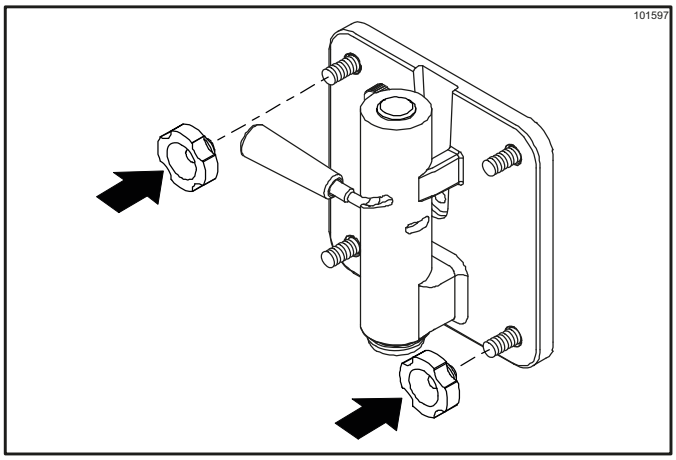

Figure 6-30

15. Position the torque arm by inserting it down into the hole on the torque rotor which protrudes from the door. Verify proper installation by moving the torque rotor back and forth to be sure it moves freely.

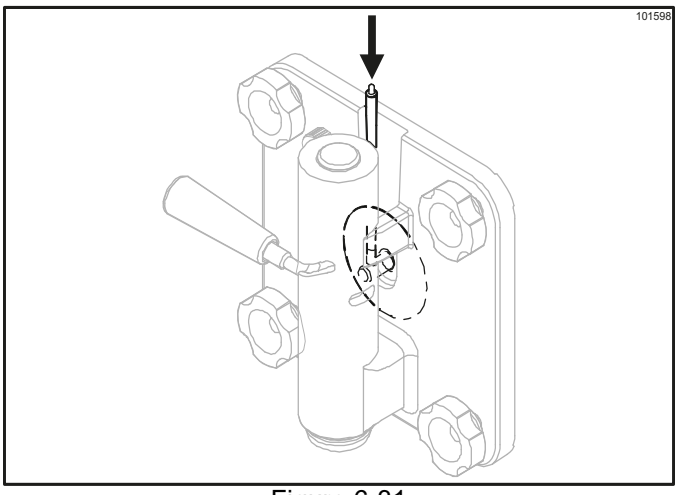

Figure 6-31

16. Slide the long drip pan into the hole in the front panel.

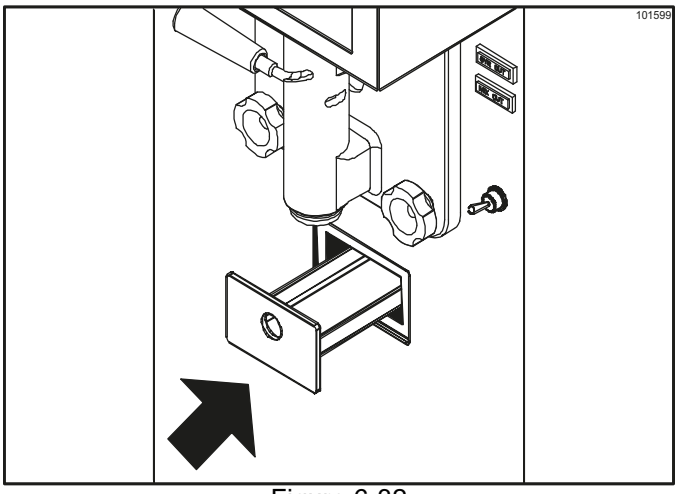

Figure 6-32

17. Install the front drip tray and splash shield under the door spout.

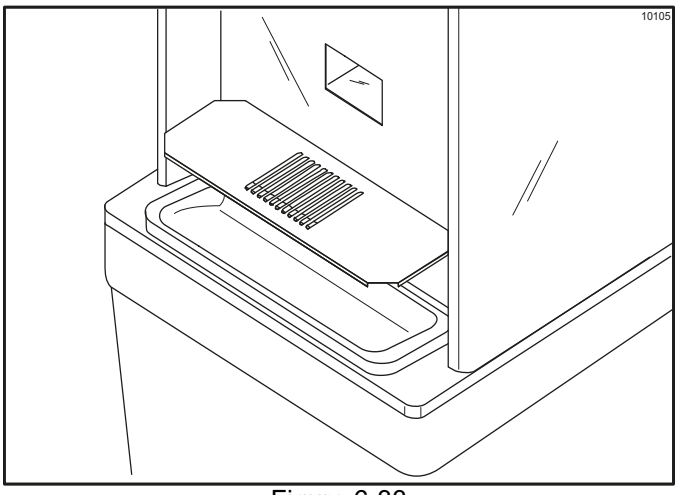

Figure 6-33

18. Lay the hopper gasket and feed tube in the bottom of the mix hopper.

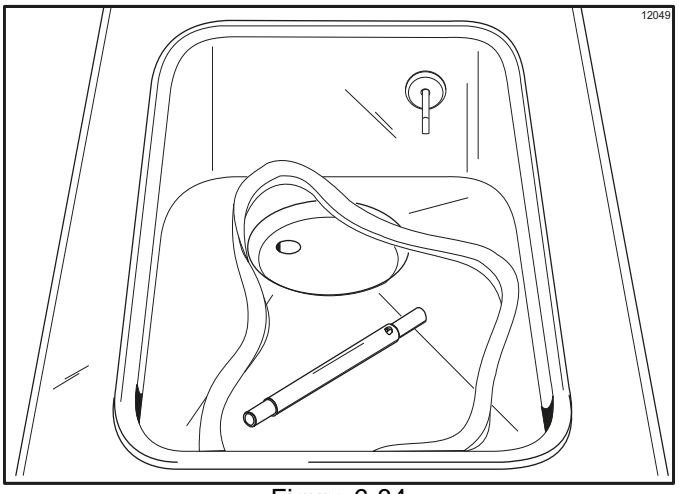

Figure 6-34

19. Complete the assembly by inserting the flavor bottles into the rack assembly on the front of the machine.

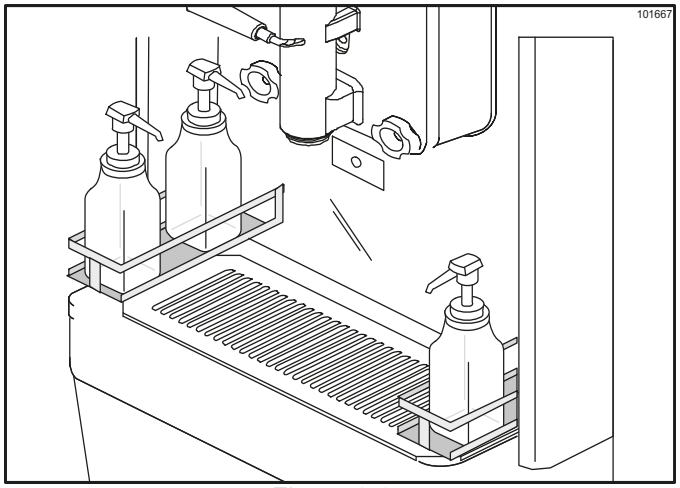

Figure 6-35

Sanitizing

1. Prepare a 2 1/2 gal (9.5 L) pail of cleaning/ sanitizing solution with an active chlorine concentrate of 100 to 200 PPM (parts per million).

   Use warm water and follow the manufacturer's specifications

2. Pour the sanitizing solution into the hopper and allow it to flow into the freezing cylinder.

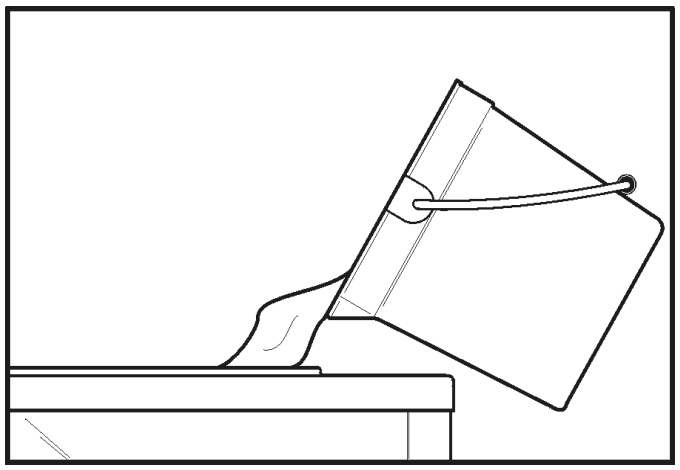

Figure 6-36

3. While the solution is flowing into the freezing cylinder, brush clean the mix hopper, mix inlet hole, air tube and mix-level sensing probe.

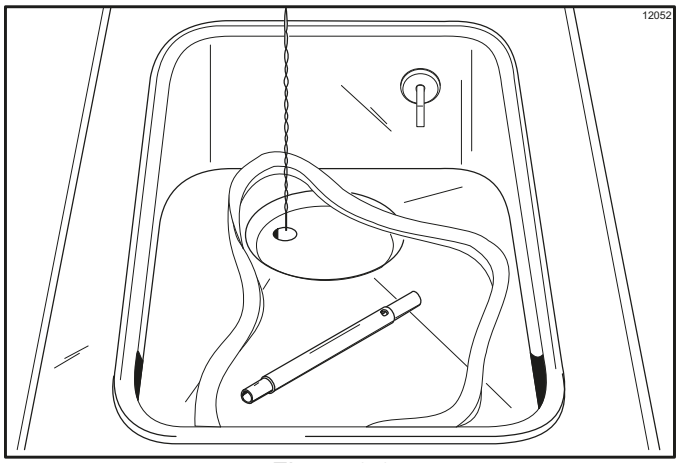

Figure 6-37

4. Place the control switch in the WASH position. This will cause the sanitizing solution in the freezing cylinder to agitate. Allow the solution to agitate for 5 minutes.

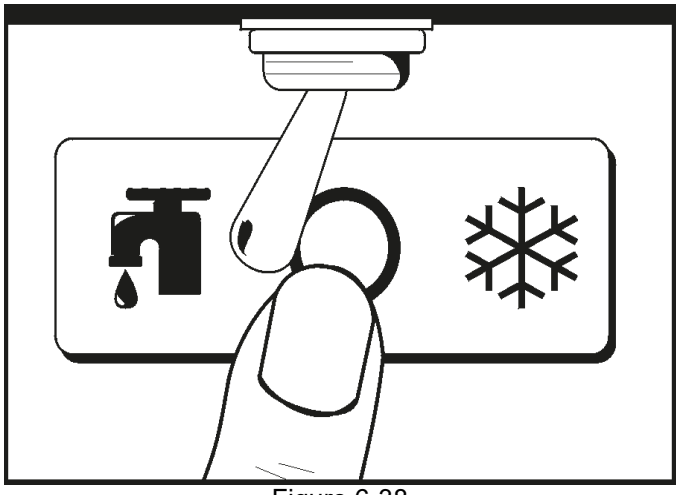

Figure 6-38

5. Place an empty pail beneath the door spout and move the draw handle to the right. Draw off all the sanitizing solution. When the sanitizer stops flowing from the door spout, move the draw handle to the left and place the control switch in the OFF position.

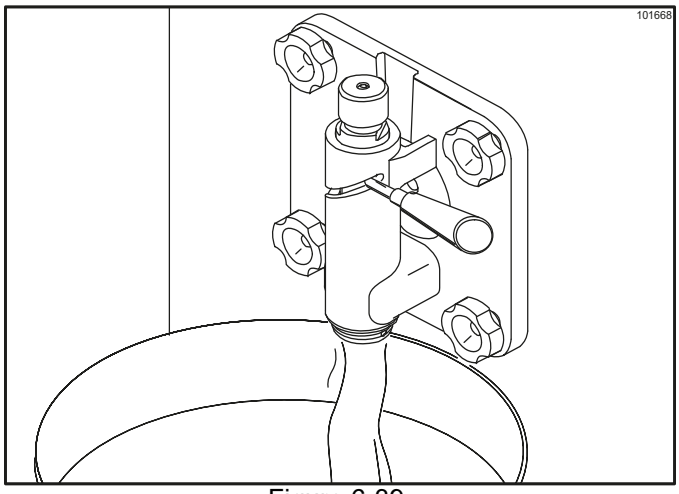

Figure 6-39.

Important! *The machine must NOT be placed in AUTO until all sanitizing solution has been removed from the freezing cylinder and proper priming procedures have been completed. Failure to follow this instruction may result in damage to the freezing cylinder.*

6. With sanitized hands, assemble the hopper gasket around the top edge of the mix hopper. Stand the air tube in the corner of the hopper.

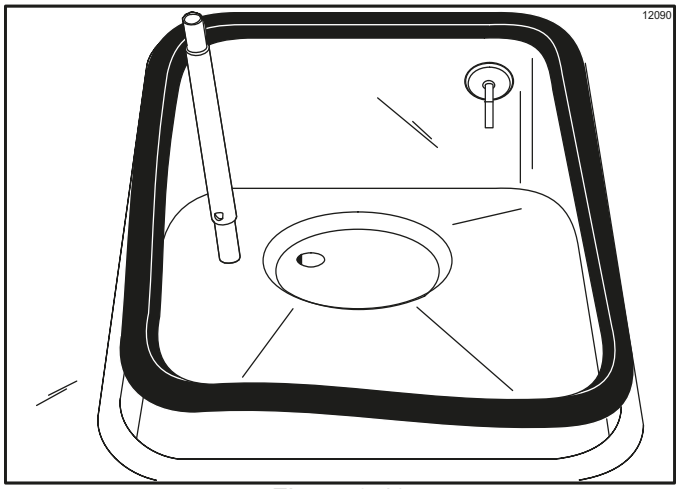

Figure 6-40

Priming

1. With a pail beneath the door spout, move the draw handle to the right. Fill the hopper with fresh slush product and allow it to flow into the freezing cylinder. This will force out any remaining sanitizing solution. When full strength mix is flowing from the door spout, move the draw handle to the left.
2. When the slush product has stopped bubbling down into the freezing cylinder, install the air tube in the mix inlet hole.

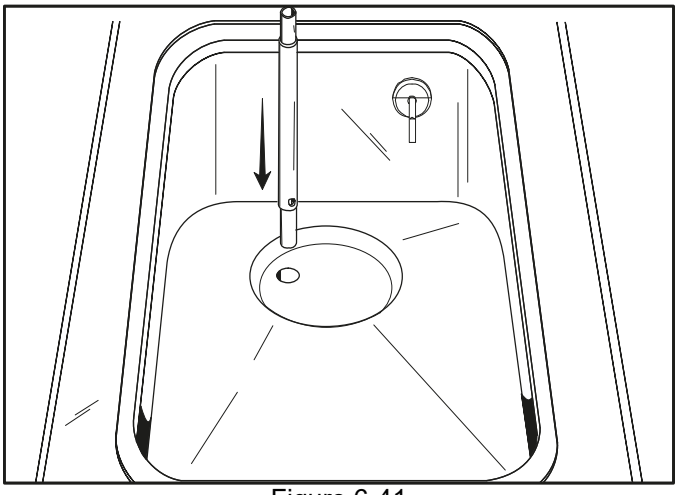

Figure 6-41

Important! *Failure to remove all sanitizing solution may result in damage to the freezing cylinder.*

3. Place the control switch in the AUTO position. When the machine cycles off, the product will be at serving viscosity.

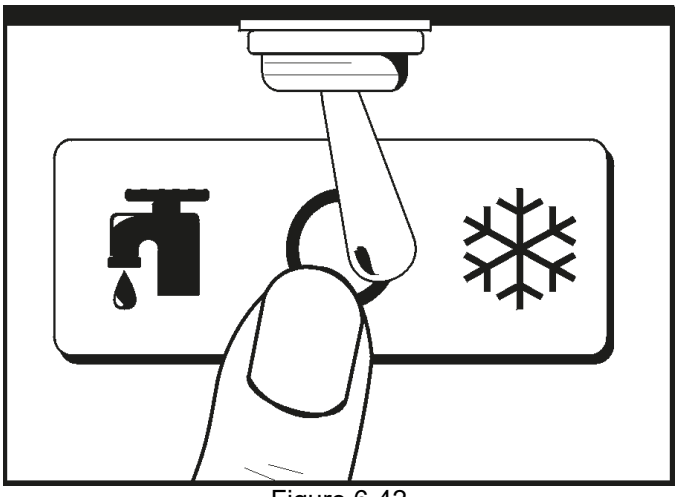

Figure 6-42

4. **Model 342 Self−Closing Door Only:** Loosen the prime plug. When product starts to leak from the bleed port, tighten the prime plug. Allow the product to continue filling the mix hopper until the upper mix level probe is satisfied and the fill system shuts off.

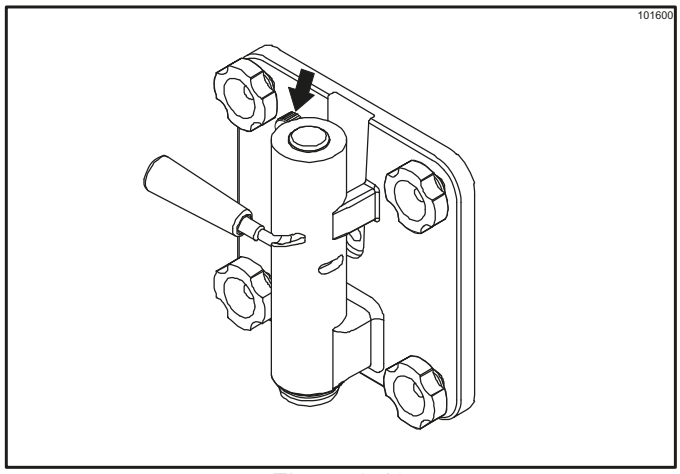

Figure 6-43

5. Place the hopper cover into position.

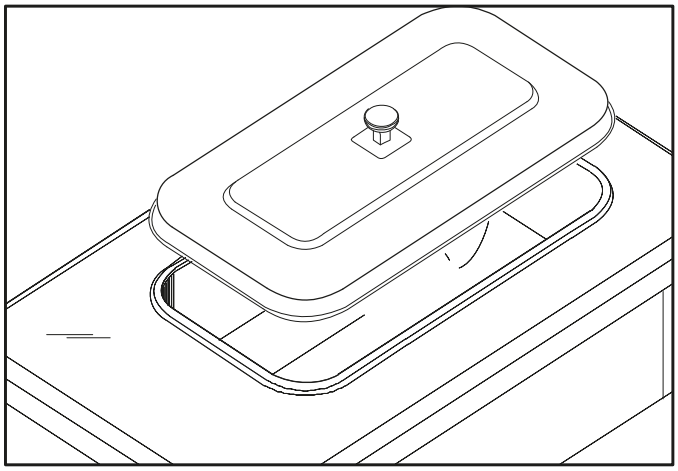

Figure 6-44

6. (Optional Flavor Rack Assembly)
   To make a refreshing slush product, add the desired flavor to the bottom of the cup by pressing the pump handle of the flavor bottle. Move the draw handle to the right and fill the cup, mixing the flavor with the product being drawn.

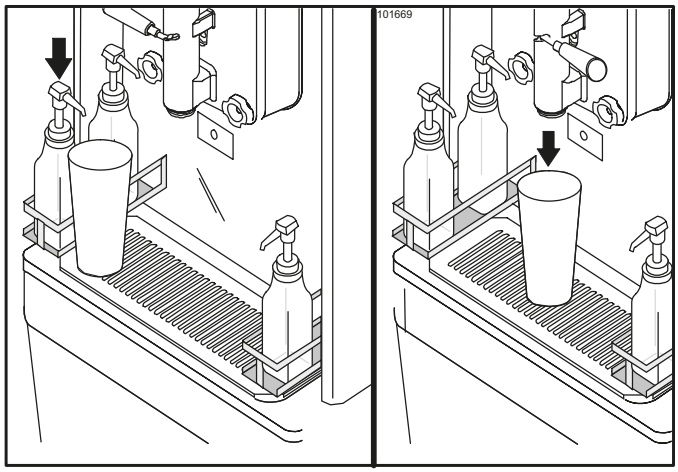

Figure 6-45

Closing Procedure

To disassemble the Models 340, 341, and 342, the following items will be needed:

- Two cleaning pails
- Sanitized stainless steel rerun can with lid
- Necessary brushes (provided with the freezer)
- Cleaner
- Single-service towels

Draining Product From the Freezing Cylinder

1. Place the control switch in the OFF position as far ahead of cleaning time as possible to allow frozen product to soften for easier cleaning.

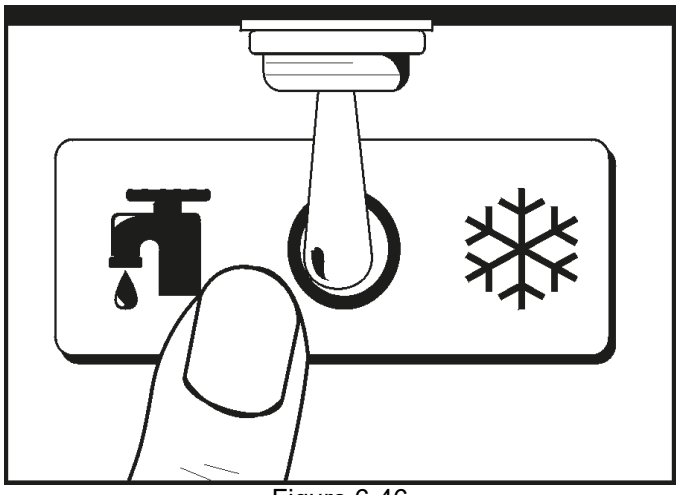

Figure 6-46

2. Remove the hopper cover, gasket, and air tube and take these parts to the sink for cleaning.

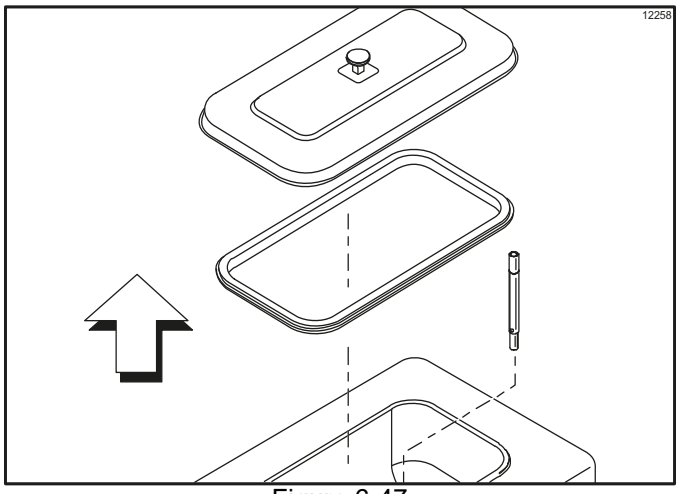

Figure 6-47

3. If local health codes permit the use of rerun, place a sanitized, NSF approved stainless steel rerun container under the door spout. Place the control switch in the WASH position and move the draw handle to the right. When all the product stops flowing from the door spout, move the draw handle to the left and place the control switch in the OFF position.
   Place a sanitized lid on the rerun container and place it in the walk-in cooler.

   Note: *For additional information regarding the proper use of rerun, see item 7 on page 7-1.*

   Note: *If local health codes **Do not** permit the use of rerun, the product must be discarded. Follow the instructions in the previous step, except drain the product into a pail and properly discard the mix.*

ALWAYS FOLLOW LOCAL HEALTH CODES.

6

Rinsing

1. Pour 2 gal. (7.6 L) of **cool**, clean water into the mix hopper. With the brushes provided, scrub the mix hopper, mix inlet hole, and mix-level sensing probe.

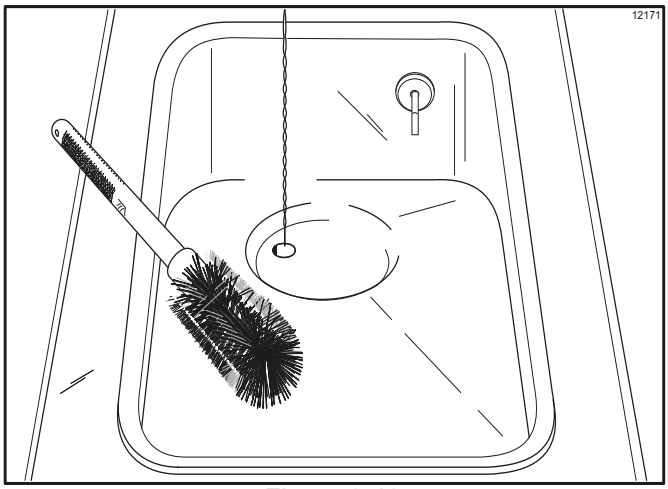

Figure 6-48

2. With a pail beneath the door spout, place the control switch in the WASH position and move the draw handle to the right. Drain all the rinse water from the freezing cylinder. When the rinse water stops flowing from the door spout, move the draw handle to the left and place the control switch in the OFF position. Repeat this procedure until the rinse water being drawn from the freezing cylinder is clear.

6

Cleaning

1. Prepare a 2 1/2 gal. (9.5 L) pail of cleaning/sanitizing solution with an active chlorine concentrate of 100 to 200 PPM (parts per million). Use warm water and follow the manufacturer's specifications.
2. Pour the cleaning solution into the hopper and allow it to flow into the freezing cylinder.

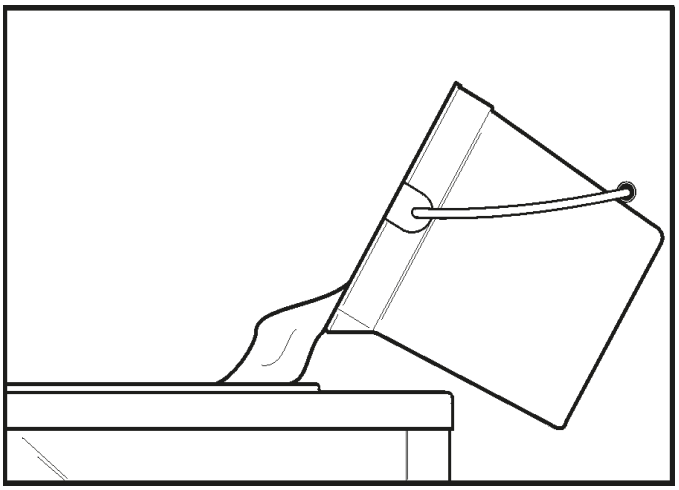

3. While the solution is flowing into the freezing cylinder, brush clean the mix hopper and the mix inlet hole.

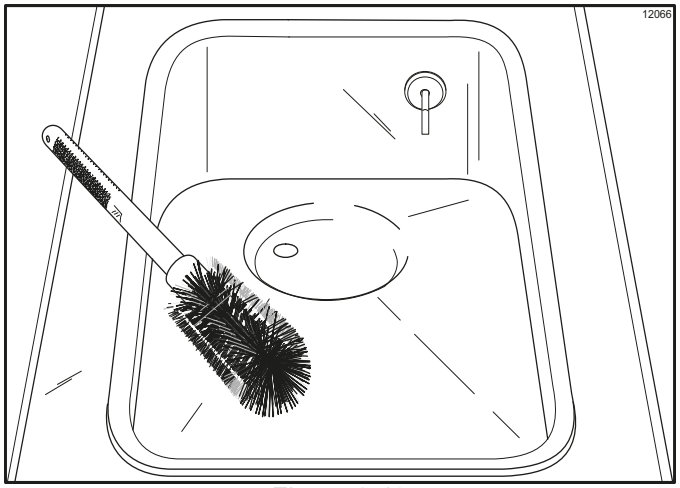

Figure 6-49

4. Place the control switch in the WASH position. This will cause the cleaning solution in the freezing cylinder to agitate.

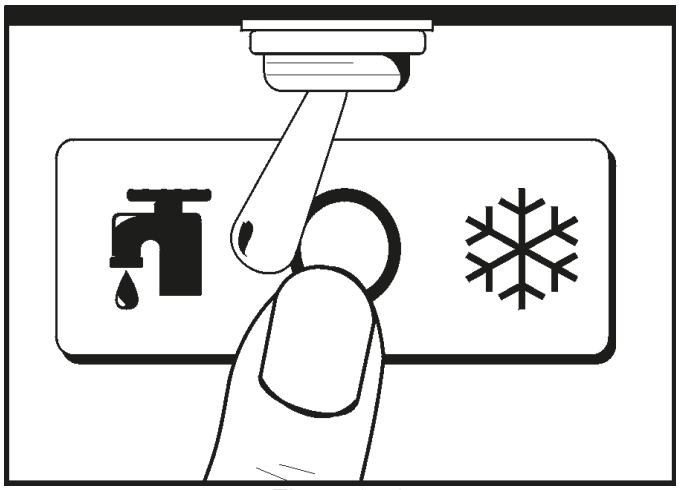

Figure 6-50

5. Place an empty pail beneath the door spout and move the draw handle to the right. Draw off all of the cleaning solution. When the solution stops flowing from the door spout, move the draw handle to the left and place the control switch in the OFF position.

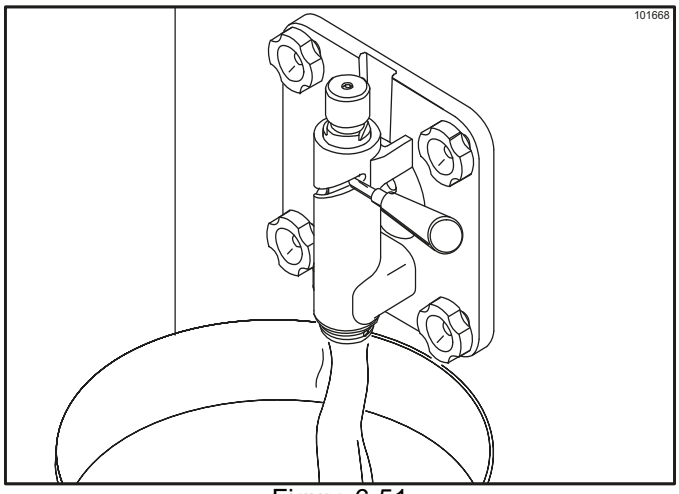

Figure 6-51

Disassembly

WARNING! Make sure the power switch is in the OFF position. Failure to follow this instruction may result in severe personal injury from hazardous moving parts.

1. Remove the torque arm, handscrews, freezer door, torque rotor, beater assembly, scraper blades, and the drive shaft from the freezing cylinder. Take these parts to the sink for cleaning.
2. Remove the front drip tray and splash shield and take them to the sink for cleaning.

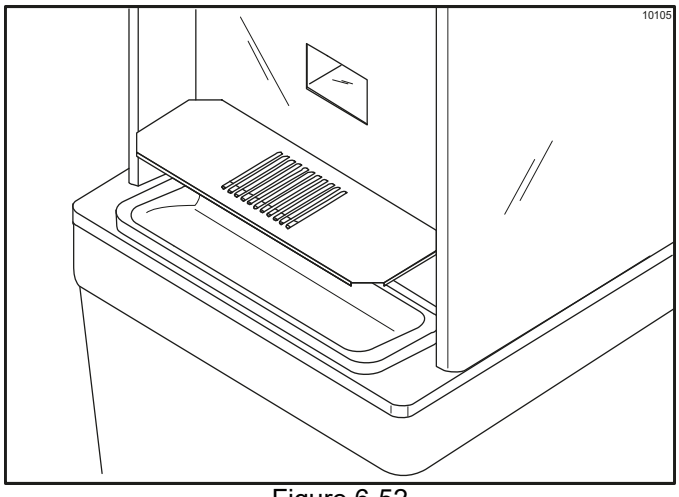

Figure 6-52

Brush Cleaning

1. Prepare a sink of cleaning/sanitizing solution with an active chlorine concentrate of 100 to 200 PPM (parts per million).Use warm water and follow the manufacturer's specifications.

   Important! *Follow label directions. Too* ***strong*** *of a solution can cause parts damage, while too* ***mild*** *of a solution will not provide adequate cleaning. Make sure all brushes provided with the freezer are available for brush cleaning.*
2. Remove the O-ring and seal from the drive shaft.

   Note: *To remove O-rings, use a single-service towel to grasp the O-ring. Apply pressure in an upward direction until the O-ring pops out of its groove. With the other hand, push the top of the O-ring forward and it will roll out of the groove and can be easily removed.*

   If there is more than one O-ring to be removed, always remove the rear O-ring first. This will allow the O-ring to slide over the forward O-rings without falling into the open grooves.

6

3. From the freezer door, remove the restrictor cap (if applicable), draw valve pin, ice buster, draw valve handle, draw valve, front bearing, and gasket. Remove the spring and prime plug (self−closing door only).

   Remove the two O-rings from the draw valve. Remove the O-ring and guide bearing from the torque rotor.

   Note: *On self-closing doors, the draw valve is under pressure. Apply downward pressure on the draw valve while removing the draw handle. After the draw handle is removed, slowly release the pressure on the draw valve.*

4. Thoroughly brush clean all disassembled parts in the cleaning solution, making sure all lubricant and mix film is removed. Place all the cleaned parts on a clean, dry surface to air dry.

5. Return to the freezer with a small amount of cleaning solution. With the black bristle brush, brush clean the rear shell bearing(s) at the back of the freezing cylinder(s).

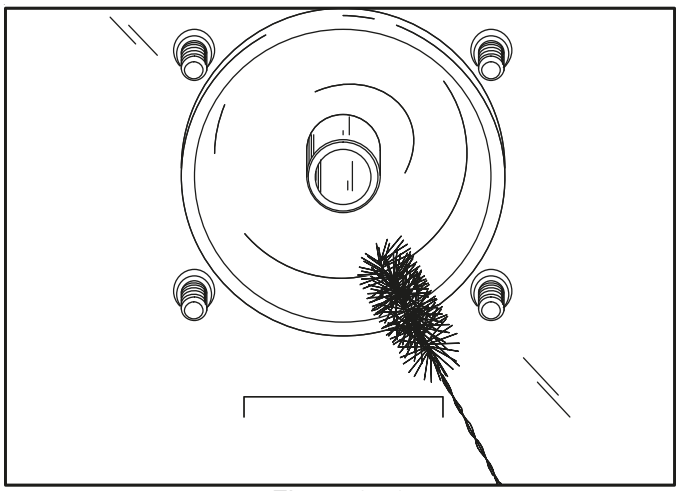

Figure 6-53

6. Remove the rear drip pan.

   Note: *If the drip pan is filled with an excessive amount of mix, it is an indication that the drive shaft O-ring, seal, or both should be replaced or properly lubricated.*

7. Wipe clean all exterior surfaces of the freezer.

During Cleaning and Sanitizing

ALWAYS FOLLOW LOCAL HEALTH CODES.

NOTICE! Cleaning and sanitizing schedules are governed by your federal, state, or local regulatory agencies and must be followed accordingly. Please refer to the cleaning section of this manual for the proper procedure to clean this machine.

IMPORTANT! *Cleaning and sanitizing must be performed daily.*

Troubleshooting Bacterial Count

- ☐ Thoroughly clean and sanitize the machine regularly, including complete disassembly and brush cleaning.
- ☐ Use all brushes supplied for thorough cleaning. The brushes are specially designed to reach all mix passageways.
- ☐ Use the bristle brush to clean the mix inlet hole which extends from the mix hopper down to the rear of the freezing cylinder.
- ☐ Use the black bristle brush to thoroughly clean the rear shell bearing located at the rear of the freezing cylinder. Use a generous amount of cleaning solution on the brush.
- ☐ Properly prepare the cleaning and sanitizing solutions. Read and follow label directions carefully. Too **strong** of a solution may damage the parts and too **weak** of a solution will not do an adequate job of cleaning or sanitizing.
- ☐ Using a screwdriver and cloth towel, keep the female square drive socket and rear shell bearing clean and free of lubricant and mix deposits.
- ☐ **If local health codes permit the use of rerun**, make sure the mix rerun is stored in a sanitized, covered, NSF-approved stainless steel rerun container and used the following day. **Do not** prime the machine with rerun. When using rerun, skim off the foam and discard; then mix the rerun with **fresh** mix in a ratio of 50:50 during the day's operation.

Regular Maintenance Checks

- ☐ Rotate scraper blades to allow both sides of the knife edge to wear evenly. This will contribute to self-sharpening and help maintain fast, efficient freezing.
- ☐ Replace scraper blades that are nicked or damaged.
- ☐ Before installing the beater, be certain that the scraper blades are properly attached over the beater pins.
- ☐ Dispose of O-rings and seals if they are worn, torn, or fit too loosely, and replace them with new ones.
- ☐ Follow all lubricating procedures as outlined in "Assembly on page 6-1".
- ☐ Check the rear shell bearing for signs of wear (excessive mix leakage in rear drip pan) and be certain it is properly cleaned.
- ☐ Check the condenser(s) for accumulation of dirt and lint. Dirty condensers will reduce the efficiency and capacity of the machine. Condensers should be cleaned monthly with a soft brush. Never use screwdrivers or other metal probes to clean between the fins.

Note: *For machines equipped with an air filter, it will be necessary to vacuum clean the filters on a monthly schedule.*

DANGER! The main power supply(s) to the machine must be disconnected prior to performing any installation, maintenance, or repairs. Failure to follow this

instruction may result in personal injury or death from electrical shock or hazardous moving parts, as well as poor performance or damage to the machine.

- ☐ On water-cooled machines, check the water lines for kinks or leaks. Kinks can occur when the machine is moved back and forth for cleaning or maintenance purposes. Deteriorated or cracked water lines should be replaced only by an authorized Taylor mechanic

Winter Storage

If the place of business is to be closed during the winter months, it is important to protect the freezer by following certain precautions, particularly if the building is subject to freezing conditions.

Disconnect the freezer from the main power source to prevent possible electrical damage.

On water-cooled freezers, disconnect the water supply. Relieve pressure on the spring in the water valve. Use air pressure on the outlet side to blow out any water remaining in the condenser. **This is extremely important.** Failure to follow this procedure may cause severe and costly damage to the refrigeration system.

Your local Taylor distributor can perform this service for you.

Wrap detachable parts of the freezer (such as beater, blades, drive shaft, and freezer door) and place in a protected dry place. Rubber trim parts and gaskets can be protected by wrapping them with moisture-proof paper. All parts should be thoroughly cleaned of dried mix or lubrication, which can attract mice and other vermin.

Table 8-1

Problem	Probable Cause	Remedy	Page Ref.
1. No product is being dispensed with the draw valve opened.	a. Improper mixing of product.	a. Carefully follow the directions for mixing the product.	--
	b. There is a mix low condition.	b. Add mix to the mix hopper.	5-1
	c. The torque arm is not installed.	c. Install the torque arm.	
	d. The torque rotor is bent or improperly installed.	d. Replace the bent rotor or follow the assembly procedures.	6-1
2. The product is too thin	a. Improper mixing of product.	a. Carefully follow the directions for mixing product.	--
	b. Scraper blades are missing or incorrectly installed.	b. Replace or install the scraper blades correctly.	6-1
	c. The consistency control knob needs adjusting.	c. Adjust accordingly.	5-1
	d. The torque rotor bound, leaving the torque arm in the COLD position. Therefore, the compressor will not run. (Far Right)	d. Free the torque rotor.	--
3. The product is too stiff	a. The torque rotor bound, leaving the torque arm in the WARM position. Therefore, the compressor continually runs. (Far Left)	a. Free the torque rotor.	--
	b. The torque arm is bent or is missing.	b. Install or replace the torque arm.	6-5
	c. The consistency control knob needs adjusting.	c. Adjust accordingly.	5-1
	d. Improper mixing of product.	d. Carefully follow the directions for mixing product.	--
	e. There is insufficient product in the freezing cylinder.	e. Keep the hopper full of mix.	5-1
4. The freezing cylinder walls are scored	a. Scraper blades are damaged.	a. Replace scraper blades.	No Tag
	b. Missing or worn front bearing on freezer door.	b. Install or replace the front bearing.	6-1
	c. Machine was placed in AUTO before all sanitizing solution was removed from freezing cylinder.	c. Place machine in AUTO only after priming is complete and all sanitizing solution has been removed.	6-10
	d. The beater assembly is bent/damaged.	d. Call a service technician to repair or replace.	---
5. Unable to remove the drive shaft.	a. There is lubrication on the square end of the drive shaft.	a. Do not lubricate the square end. Contact service technician for removal.	6-1
	b. The corners of the drive shaft and/or drive coupling are bent.	b. Replace the drive shaft and/or drive coupling.	--

Problem	Probable Cause	Remedy	Page Ref.
6. There is excessive mix leakage in the rear drip pan.	a. There is improper or inadequate lubrication on the drive shaft O-ring or seal.	a. Use an approved food grade lubricant (example: Taylor Lube) and follow the lubrication procedures.	6-1
	b. Bad or missing O-ring or seal on drive shaft.	b. Replace every 3 months.	6-1/9-1
	c. The rear shell bearing is worn.	c. Contact service technician for replacement.	--
7. There is no freezer operation with the machine in the AUTO position.	a. The machine is unplugged.	a. Plug cord in wall receptacle.	--
	b. The beater motor has tripped.	b. Place the power switch in the OFF position. Allow the motor to cool and then resume normal operation. Contact service technician if the problem continues.	--
	c. The circuit breaker is tripped or the fuse is blown.	c. Reset the circuit breaker or replace the blown fuse.	--
8. The machine is not freezing product when in the AUTO position.	a. The torque rotor bound, leaving the torque arm in the COLD position. Therefore, the compressor will not run. (Far Right)	a. Free the torque rotor.	--
	b. The torque arm is bent.	b. Replace the torque arm.	6-5
	c. The condensers are dirty.	c. Clean the condensers regularly.	7-1
9. The guide bearing is missing.	a. The guide bearing is stuck in the drive shaft.	a. Remove the guide bearing from the hole in the drive shaft.	--
10. There is excessive leakage from the door spout.	a. There is improper or inadequate lubrication on the draw valve O-rings.	a. Use an approved food grade lubricant (example: Taylor Lube) and follow the lubrication procedures.	6-1
	b. The draw valve O-ring is bad or missing.	b. Replace O-rings every three months.	9-1
11. The door will not go into position easily.	a. The beater assembly is incorrectly positioned.	a. The open end of the beater assembly should be in the 11 o'clock position.	6-3

Section 9: Parts Replacement Schedule

Table 9-1

Part Description	Every 3 Months	Every 6 Months	Annually	Qty
Drive Shaft O-ring	X			1*
Drive Shaft Seal	X			1*
Scraper Blade	Inspect & replace if necessary	Minimum		2*
Torque Rotor O-ring	X			1*
Guide Bearing	X			1*
Freezer Door Gasket	X			1*
Front Bearing	X			1*
Draw Valve O-ring	X			2*
Black Bristle Brush, 1 x 2		Inspect and replace if necessary.	Minimum	1
Double Ended Brush		Inspect and replace if necessary.	Minimum	1
Bristle Brush, 1 x 2		Inspect and replace if necessary.	Minimum	1
Bristle Brush, 3 x 7		Inspect and replace if necessary.	Minimum	1

*Double quantity for Model 342.

Notes:

Section 10: Limited Warranty on Equipment

TAYLOR COMPANY LIMITED WARRANTY ON FREEZERS

Taylor Company is pleased to provide this limited warranty on new Taylor-branded freezer equipment available from Taylor to the market generally (the Product) to the original purchaser only.

LIMITED WARRANTY

Taylor warrants the Product against failure due to defect in materials or workmanship under normal use and service as follows. All warranty periods begin on the date of original Product installation. If a part fails due to defect during the applicable warranty period, Taylor, through an authorized Taylor distributor or service agency, will provide a new or remanufactured part, at Taylor's option, to replace the failed defective part at no charge for the part. Except as otherwise stated herein, these are Taylor's exclusive obligations under this limited warranty for a Product failure. This limited warranty is subject to all provisions, conditions, limitations, and exclusions listed below and on the reverse (if any) of this document.

Table 10-1

Product	Part	Limited Warranty Period
Soft Serve	Insulated Shell Assembly	Five (5) years
Frozen Yogurt	Refrigeration Compressor (except service valve)	Five (5) years
Shakes	Beater Motors	Two (2) years
Smoothies	Beater Drive Gear	Two (2) years
Frozen Beverage	Printed circuit boards and Softech controls beginning with serial number H8024200	Two (2) years
Batch Desserts	Parts not otherwise listed in this table or excluded below	One (1) year

LIMITED WARRANTY CONDITIONS

1. If the date of original installation of the Product cannot be verified, then the limited warranty period begins ninety (90) days from the date of Product manufacture (as indicated by the Product serial number). Proof of purchase may be required at time of service.
2. This limited warranty is valid only if the Product is installed and all required service work on the Product is performed by an authorized Taylor distributor or service agency, and only if genuine, new Taylor parts are used.
3. Installation, use, care, and maintenance must be normal and in accordance with all instructions contained in the Taylor Operator's Manual.
4. Defective parts must be returned to the authorized Taylor distributor or service agency for credit.
5. The use of any refrigerant other than that specified on the Product's data label will void this limited warranty.

LIMITED WARRANTY EXCEPTIONS

This limited warranty does **not** cover:

1. Labor or other costs incurred for diagnosing, repairing, removing, installing, shipping, servicing, or handling of defective parts, replacement parts, or new Products.
2. Normal maintenance, cleaning, and lubrication as outlined in the Taylor Operator's Manual, including cleaning of condensers.
3. Replacement of wear items designated as Class 000 parts in the Taylor Operator's Manual.
4. External hoses, electrical power supplies, and machine grounding.

5. Parts not supplied or designated by Taylor, or damages resulting from their use.
6. Return trips or waiting time required because a service technician is prevented from beginning warranty service work promptly upon arrival.
7. Failure, damage, or repairs due to faulty installation, misapplication, abuse, no or improper servicing, unauthorized alteration, or improper operation or use as indicated in the Taylor Operator's Manual, including but not limited to the failure to use proper assembly and cleaning techniques, tools, or approved cleaning supplies.
8. Failure, damage, or repairs due to theft, vandalism, wind, rain, flood, high water, water, lightning, earthquake, or any other natural disaster, fire, corrosive environments, insect or rodent infestation, or other casualty, accident or condition beyond the reasonable control of Taylor; operation above or below the electrical or water supply specification of the Product; or components repaired or altered in any way so as, in the judgment of the Manufacturer, to adversely affect performance, or normal wear or deterioration.
9. Any Product purchased over the Internet.
10. Failure to start due to voltage conditions, blown fuses, open circuit breakers, or damages due to the inadequacy or interruption of electrical service.
11. Electricity or fuel costs, or increases in electricity or fuel costs from any reason whatsoever.
12. Damages resulting from the use of any refrigerant other than that specified on the Product's data label will void this limited warranty.
13. Any cost to replace, refill, or dispose of refrigerant, including the cost of refrigerant.
14. **ANY SPECIAL, INDIRECT, OR CONSEQUENTIAL PROPERTY OR COMMERCIAL DAMAGE OF ANY NATURE WHATSOEVER.** Some jurisdictions do not allow the exclusion of incidental or consequential damages, so this limitation may not apply to you.

This limited warranty gives you specific legal rights, and you may also have other rights which vary from jurisdiction to jurisdiction.

LIMITATION OF WARRANTY

THIS LIMITED WARRANTY IS EXCLUSIVE AND IS IN LIEU OF ALL OTHER WARRANTIES, CONDITIONS , AND/OR REMEDIES UNDER THE LAW, INCLUDING ANY IMPLIED WARRANTIES OR CONDITIONS OF MERCHANTABILITY OR FITNESS FOR A PARTICULAR PURPOSE. THE ORIGINAL OWNER'S SOLE REMEDY WITH RESPECT TO ANY PRODUCTS SHALL BE REPAIR OR REPLACEMENT OF DEFECTIVE COMPONENTS UNDER THE TERMS OF THIS LIMITED WARRANTY. ALL RIGHTS TO CONSEQUENTIAL OR INCIDENTAL DAMAGES (INCLUDING CLAIMS FOR LOST SALES, LOST PROFITS, PRODUCT LOSS, PROPERTY DAMAGES, OR SERVICE EXPENSES) ARE EXPRESSLY EXCLUDED. THE EXPRESS WARRANTIES MADE IN THIS LIMITED WARRANTY MAY NOT BE ALTERED, ENLARGED, OR CHANGED BY ANY DISTRIBUTOR, DEALER, OR OTHER PERSON, WHATSOEVER.

LEGAL REMEDIES

The owner **must** notify Taylor in writing, by certified or registered letter to the following address, of any defect or complaint with the Product, stating the defect or complaint and a specific request for repair, replacement, or other correction of the Product under warranty, mailed at least thirty (30) days before pursuing any legal rights or remedies.

Taylor Company
750 N. Blackhawk Blvd.
Rockton, IL 61072, U.S.A.

Section 11: Limited Warranty on Parts

TAYLOR COMPANY LIMITED WARRANTY ON TAYLOR GENUINE PARTS

Taylor Company is pleased to provide this limited warranty on new Taylor genuine replacement components and parts available from Taylor to the market generally (the Parts) to the original purchaser only.

LIMITED WARRANTY

Taylor warrants the Parts against failure due to defect in materials or workmanship under normal use and service as follows. All warranty periods begin on the date of original installation of the Part in the Taylor unit. If a Part fails due to defect during the applicable warranty period, Taylor, through an authorized Taylor distributor or service agency, will provide a new or remanufactured Part, at Taylor's option, to replace the failed defective Part at no charge for the Part. Except as otherwise stated herein, these are Taylor's exclusive obligations under this limited warranty for a Part failure. This limited warranty is subject to all provisions, conditions, limitations, and exclusions listed below and on the reverse (if any) of this document.

Table 11-1

Part's Warranty Class Code or Part	Limited Warranty Period
Class 103 Parts[1]	Three (3) Months
Class 212 Parts[2]	Twelve (12) Months
Class 512 Parts	Twelve (12) Months
Class 000 Parts	No Warranty
Taylor Part #072454 (Motor-24VDC *C832/C842*)	Four (4) years

LIMITED WARRANTY CONDITIONS

1. If the date of original installation of the Part cannot be otherwise verified, proof of purchase may be required at time of service.
2. This limited warranty is valid only if the Part is installed and all required service work in connection with the Part is performed by an authorized Taylor distributor or service agency.
3. The limited warranty applies only to Parts remaining in use by their original owner at their original installation location in the unit of original installation.
4. Installation, use, care, and maintenance must be normal and in accordance with all instructions contained in the Taylor Operator's Manual.
5. Defective Parts must be returned to the authorized Taylor distributor or service agency for credit.
6. This warranty is not intended to shorten the length of any warranty coverage provided pursuant to a separate Taylor Limited Warranty on freezer or grill equipment.
7. The use of any refrigerant other than that specified for the unit in which the Part is installed will void this limited warranty.

[1, 2] Except that Taylor Part #032129SER2 (Compressor-Air-230V SERV) and Taylor Part #075506SER1 (Compressor-Air-115V 60HZ) shall have a limited warranty period of twelve (12) months when used in Taylor freezer equipment and a limited warranty period of two (2) years when used in Taylor grill equipment.

LIMITED WARRANTY EXCEPTIONS

This limited warranty does **not** cover:

1. Labor or other costs incurred for diagnosing, repairing, removing, installing, shipping, servicing, or handling of defective Parts, replacement Parts, or new Parts.
2. Normal maintenance, cleaning, and lubrication as outlined in the Taylor Operator's Manual, including cleaning of condensers or carbon and grease buildup.
3. Required service, whether cleaning or general repairs, to return the cooking surface assemblies, including the upper platen and lower plate, to an operational condition to achieve proper cooking or allow proper assembly of release sheets and clips as a result of grease buildup on the cooking surfaces, including but not limited to the platen and plate, sides of the shroud or top of the shroud.
4. Replacement of cooking surfaces, including the upper platen and lower plate, due to pitting or corrosion (or in the case of the upper platen, due to loss of plating) as a result of damage due to the impact of spatulas or other small wares used during the cooking process or as a result of the use of cleaners, cleaning materials, or cleaning processes not approved for use by Taylor.
5. Replacement of wear items designated as Class 000 Parts in the Taylor Operator's Manual, as well as any release sheets and clips for the Product's upper platen assembly.
6. External hoses, electrical power supplies, and machine grounding.
7. Parts not supplied or designated by Taylor, or damages resulting from their use.
8. Return trips or waiting time required because a service technician is prevented from beginning warranty service work promptly upon arrival.
9. Failure, damage, or repairs due to faulty installation, misapplication, abuse, no or improper servicing, unauthorized alteration, or improper operation or use as indicated in the Taylor Operator's Manual, including but not limited to the failure to use proper assembly and cleaning techniques, tools, or approved cleaning supplies.
10. Failure, damage, or repairs due to theft, vandalism, wind, rain, flood, high water, water, lightning, earthquake, or any other natural disaster, fire, corrosive environments, insect or rodent infestation, or other casualty, accident or condition beyond the reasonable control of Taylor; operation above or below the gas, electrical, or water supply specification of the unit in which a part is installed; or Parts or the units in which they are installed repaired or altered in any way so as, in the judgment of Taylor, to adversely affect performance, or normal wear or deterioration.
11. Any Part purchased over the Internet.
12. Failure to start due to voltage conditions, blown fuses, open circuit breakers, or damages due to the inadequacy or interruption of electrical service.
13. Electricity, gas, or other fuel costs, or increases in electricity or fuel costs from any reason whatsoever.
14. Damages resulting from the use of any refrigerant other than that specified for the unit in which the Part is installed will void this limited warranty.
15. Any cost to replace, refill, or dispose of refrigerant, including the cost of refrigerant.
16. **ANY SPECIAL, INDIRECT, OR CONSEQUENTIAL PROPERTY OR COMMERCIAL DAMAGE OF ANY NATURE WHATSOEVER.** Some jurisdictions do not allow the exclusion of incidental or consequential damages, so this limitation may not apply to you.

This limited warranty gives you specific legal rights, and you may also have other rights which vary from jurisdiction to jurisdiction.

LIMITATION OF WARRANTY

THIS LIMITED WARRANTY IS EXCLUSIVE AND IS IN LIEU OF ALL OTHER WARRANTIES, CONDITIONS, AND/OR REMEDIES UNDER THE LAW, INCLUDING ANY IMPLIED WARRANTIES OR CONDITIONS OF MERCHANTABILITY OR FITNESS FOR A PARTICULAR PURPOSE. THE ORIGINAL OWNER'S SOLE REMEDY WITH RESPECT TO ANY PRODUCTS SHALL BE REPAIR OR REPLACEMENT OF DEFECTIVE PARTS UNDER THE TERMS OF THIS LIMITED WARRANTY. ALL RIGHTS TO CONSEQUENTIAL OR INCIDENTAL DAMAGES (INCLUDING CLAIMS FOR LOST SALES, LOST PROFITS, PRODUCT LOSS, PROPERTY DAMAGES, OR SERVICE EXPENSES) ARE EXPRESSLY EXCLUDED. THE EXPRESS WARRANTIES MADE IN THIS LIMITED WARRANTY MAY NOT BE ALTERED, ENLARGED, OR CHANGED BY ANY DISTRIBUTOR, DEALER, OR OTHER PERSON, WHATSOEVER.

LEGAL REMEDIES

The owner **must** notify Taylor in writing, by certified or registered letter to the following address, of any defect or complaint with the Part, stating the defect or complaint and a specific request for repair, replacement, or other correction of the Part under warranty, mailed at least thirty (30) days before pursuing any legal rights or remedies.

Taylor Company
750 N. Blackhawk Blvd.
Rockton, IL 61072, U.S.A.

Notes: