# OPERATOR'S MANUAL

TAYLOR®

# Model 702, 741 & 772 Soft Serve Freezers

**Original Operating Instructions**

**028759-M**

**6/97 (Original Publication)**
**(Updated 8/12/2020)**

**Complete this page for quick reference when service is required:**

Taylor Distributor:_____

Address:_____

Phone: _____

Service: _____

Parts: _____

Date of Installation: _____

**Information found on the data label:**

Model Number: _____

Serial Number:_____

Electrical Specs: Voltage_____ Cycle_____

Phase_____

Maximum Fuse Size: _____ A

Minimum Wire Ampacity: _____ A

***Note:*** *Continuing research results in steady improvements; therefore, information in this manual is subject to change without notice.*

***Note:*** *Only instructions originating from the factory or its authorized translation representative(s) are considered to be the original set of instructions.*

© 1997 Taylor Inc.
028759-M

Any unauthorized reproduction, disclosure, or distribution of copies by any person of any portion of this work may be a violation of copyright law of the United States of America and other countries, could result in the awarding of statutory damages of up to $250,000 (17 USC 504) for infringement, and may result in further civil and criminal penalties. All rights reserved.

TAYLOR®

Taylor Company
750 N. Blackhawk Blvd.
Rockton, IL 61072

# Table of Contents


## Section 1: To the Installer

Installer Safety ..... 1-1
Site Preparation ..... 1-1
Air-Cooled Units ..... 1-2
Water Connections ..... 1-2
Electrical Connections ..... 1-2
Check Out ..... 1-3
Controls ..... 1-4
Beater Rotation ..... 1-4
Refrigerant ..... 1-4

## Section 2: To the Operator

## Section 3: Safety

## Section 4: Operator Parts Identification

Model 702 ..... 4-1
Model 702 Door Assembly ..... 4-3
Model 741 ..... 4-4
Model 772 ..... 4-6
Model 741 & 772 Door Assembly ..... 4-8

## Section 5: User Interface

Indicator Light—MIX LOW ..... 5-1
Symbol Definitions ..... 5-1
Control Switch ..... 5-1
Reset Button ..... 5-1
Thermistor Control ..... 5-2
Separate Hopper Refrigeration (SHR) System ..... 5-2

## Section 6: Operating Procedures

Assembly ..... 6-1
Sanitizing ..... 6-4
Priming ..... 6-5
Closing Procedures ..... 6-6
Draining Product from the Freezing Cylinder ..... 6-6
Rinsing ..... 6-6
Cleaning ..... 6-6
Disassembly ..... 6-7
Brush Cleaning ..... 6-7

# Table of Contents


## Section 7: Operator Checklist

During Cleaning and Sanitizing ..... 7-1
Troubleshooting Bacterial Count ..... 7-1
Regular Maintenance Checks ..... 7-1
Winter Storage ..... 7-2

## Section 8: Troubleshooting Guide

## Section 9: Parts Replacement Schedule

## Section 10: Limited Warranty on Equipment

## Section 11: Limited Warranty on Parts

The following information has been included in the manual as safety and regulatory guidelines. For complete installation instructions, please see the installation checklist.

## Installer Safety



***IMPORTANT!*** *In all areas of the world, equipment should be installed in accordance with existing local codes. Please contact your local authorities if you have any questions.*

*Care should be taken to ensure that all basic safety practices are followed during the installation and servicing activities related to the installation and service of Taylor® equipment.*

- *Only authorized Taylor service personnel should perform installation, maintenance, and repairs on Taylor equipment.*
- *Authorized service personnel should consult OSHA Standard 29CFRI910.147 or the applicable code of the local area for the industry standards on lockout/tagout procedures before beginning any installation or repairs.*
- *Authorized service personnel must ensure that the Personal Protective Equipment (PPE) is available and worn when required during installation and service.*
- *Authorized service personnel must remove all metal jewelry, rings, and watches before working on electrical equipment.*



**DANGER!** The main power supply(s) to the machine must be disconnected prior to performing any installation, maintenance, or repairs. Failure to follow this instruction may result in personal injury or death from electrical shock or hazardous moving parts as well as poor performance or damage to the machine.

***Note:*** *All repairs must be performed by an authorized Taylor service technician.*



**WARNING!** This machine has many sharp edges that can cause severe injuries.

## Site Preparation

Review the area where the unit will be installed before uncrating the unit. Make sure that all possible hazards to the user and the equipment have been addressed.

**For Indoor Use Only:** This unit is designed to operate indoors, under normal ambient temperatures of 70°F to 75°F (21°C to 24°C). The freezer has successfully performed in high ambient temperatures of 104°F (40°C) at reduced capacities.



**WARNING!** This machine must **NOT** be installed in an area where a water jet or hose can be used. **NEVER** use a water jet or hose to rinse or clean the machine. Failure to follow this instruction may result in electrocution.



**CAUTION!** This machine must be placed on a level surface. Extreme care should be taken when moving for any reason. Two or more persons are required to safely move this machine. Failure to comply may result in personal injury or damage to the machine.

Uncrate the unit and inspect it for damage. Report any damage to your Taylor distributor.

This piece of equipment is made in the USA and has USA sizes of hardware. All metric conversions are approximate and vary in size.

## Air-Cooled Units

**Do not** obstruct air intake and discharge openings. The model 702 requires a minimum of 6 in. (152 mm) of clearance around both sides of the freezer. Install the deflector on the right side of the unit and place the back of the unit against the wall to prevent recirculation of warm air. The models 741 and 772 require a minimum of 3 in. (76 mm) of clearance around all sides. Install the deflector provided. Failure to allow adequate clearance can reduce the refrigeration capacity of the freezers and possibly cause permanent damage to the compressors.

## Water Connections

**(Water-Cooled Units Only)**

An adequate cold water supply must be provided with a hand shutoff valve. On the underside rear of the base pan, two 3/8 in. IPS (for single-head units) or two 1/2 in. IPS (for double head units) water connections for inlet and outlet have been provided for easy hookup. Permanently connect the machine using 1/2 in. (12.7 mm) inside diameter water lines. (Flexible lines are recommended, if local codes permit.) Depending on local water conditions, it may be necessary to install a water strainer to prevent foreign substances from clogging the automatic water valve. There will be only one water **in** and one water **out** connection for both single-head and double-head units. **Do not** install a hand shutoff valve on the water **out** line. Water should always flow in this order: First, through the automatic water valve; second, through the condenser; and third, through the outlet fitting to an **open trap drain.**

***IMPORTANT!*** *A backflow prevention device is required on the incoming water connection side. Please see the applicable national, state, and local codes for determining the proper configuration. Water pressure to the unit must not exceed 150 psi (1034 kPa).*

## Electrical Connections

In the United States, this equipment is intended to be installed in accordance with the National Electrical Code (NEC), ANSI/NFPA 70-1987. The purpose of the NEC code is the practical safeguarding of persons and property from hazards arising from the use of electricity. This code contains provisions considered necessary for safety. In all other areas of the world, equipment should be installed in accordance with the existing local codes. Please contact your local authorities.

**FOLLOW YOUR LOCAL ELECTRICAL CODES.**

Each freezer requires one power supply for each data label. Check the data label(s) on the freezer for branch circuit overcurrent protection or fuse, wire ampacity, and electrical specifications. See the wiring diagram provided inside the electrical box for proper power connections.

**WARNING!** This machine must be properly grounded. Failure to do so can result in severe personal injury from electrical shock.

***IMPORTANT!*** *An equipotential grounding lug is provided with this machine. Some countries require the grounding lug to be properly attached to the rear of the frame by the authorized installer. The installation location is marked by the equipotential bonding symbol (5021 of IEC 60417-1) on both the removable panel and the machine's frame.*

***IMPORTANT!***

- *Stationary appliances which are not equipped with a power cord and a plug or another device to disconnect the appliance from the power source must have an all-pole disconnecting device with a contact gap of at least 0.125 in. (3 mm) installed in the external installation.*
- *Appliances that are permanently connected to fixed wiring and for which leakage currents may*

*exceed 10 mA, particularly when disconnected or not used for long periods, or during initial installation, shall have protective devices to protect against the leakage of current, such as a Ground Fault Interrupter (GFI), installed by the authorized personnel to the local codes.*

- *Supply cords used with this machine shall be oil-resistant, sheathed flexible cable not lighter than ordinary polychloroprene or other equivalent synthetic elastomer-sheathed cord (code designation 60245 IEC 57) installed with the proper cord anchorage to relieve conductors from strain, including twisting, at the terminals and protect the insulation of the conductors from abrasion.*

*If the supply cord is damaged, it must be replaced by an authorized Taylor service technician in order to avoid a hazard. Secure the supply cord ground lead to the machine in a location where if the cord is pulled, the main power leads will become taut before the ground lead can break loose.*

## Check Out

Once the unit is installed, it is advisable to check the following controls and mechanical operations of the freezer and make any necessary adjustments. If applicable, repeat these checks for the second freezing cylinder on double-head units.

## Controls

Place the control switch in the AUTO position. The main refrigeration system will operate (compressor, beater motor, and condenser fan). The dial light and the mix low indicator will be lit.




Figure 1-1

If the freezer is water cooled, the automatic water valve will begin to open, and cold water will flow into the condenser. This will remove heat from the refrigerant. As the water flows into the open trap drain, it should be warm to the touch. Place the control switch in the OFF position.

## Beater Rotation

**NOTICE!** Beater rotation must be clockwise as viewed looking into the freezing cylinder.

To correct the rotation on a three-phase machine, interchange any two incoming power supply lines at the freezer main terminal block only. To correct rotation on a single-phase machine, exchange leads inside the beater motor. (Follow the diagram printed on the motor.)

Electrical connections are made directly to the terminal block provided in the main control box located behind the service panel.

It is recommended that beater rotation be performed by an authorized Taylor service technician.

## Refrigerant

 **CAUTION!** This machine contains fluorinated greenhouse gases (F-Gas) to provide refrigeration using a hermetically sealed circuit or within foam insulation. This machine's type of gas, quantity, Global Warming Potential (GWP) and CO2 tonnes equivalent information is recorded on the machine's data label. The refrigerant used is generally considered nontoxic and nonflammable. However any gas under pressure is potentially hazardous and must be handled with caution.

NEVER fill any refrigerant cylinder completely with liquid. Filling the cylinder to approximately 80% will allow for normal expansion.

 **CAUTION!** Use only approved refrigerant listed on the machine's data label or authorized through a manufacturer's technical bulletin. The use of any other refrigerant may expose users and operators to unexpected safety hazards.

 **WARNING!** Refrigerant liquid sprayed onto the skin may cause serious damage to tissue. Keep eyes and skin protected. If refrigerant burns should occur, flush immediately with cold water. If burns are severe, apply ice packs and contact a physician immediately.

 **NOTICE!** Taylor reminds technicians to be aware of and in compliance with local government laws regarding refrigerant recovery, recycling, and reclaiming systems. For information regarding applicable local laws, please contact your local authorized Taylor distributor.

 ***IMPORTANT!*** *Refrigerants and their associated lubricants may be extremely moisture absorbent. When opening a refrigeration system, the maximum time the system is open must not exceed 15 minutes. Cap all open tubing to prevent humid air or water from being absorbed by the oil.*

# Section 2 To the Operator

The freezer you have purchased has been carefully engineered and manufactured to give you dependable operation. The Taylor freezer, when properly operated and cared for, will produce a consistent quality product. Like all mechanical products, this machine will require cleaning and maintenance. A minimum amount of care and attention is necessary if the operating procedures outlined in this manual are followed closely.

This Operator's Manual should be read before operating or performing any maintenance on your equipment.

Your Taylor freezer will **not** eventually compensate and correct for any errors during the setup or filling operations. Thus, the initial assembly and priming procedures are of extreme importance. It is strongly recommended that personnel responsible for the equipment's operation review these procedures in order to be properly trained and to make sure that there is no confusion.

ft you require technical assistance, contact your local authorized Taylor distributor.

***Note:*** *Your Taylor warranty is valid only if the parts are authorized Taylor parts, purchased from the local authorized Taylor distributor, and only if all required service work is provided by an authorized Taylor service technician. Taylor reserves the right to deny warranty claims on units or parts if Taylor-unapproved parts or incorrect refrigerant were installed in the unit, system modifications were performed beyond factory recommendations, or it is determined that the failure was caused by abuse, misuse, neglect, or failure to follow all operating instructions. For full details of your Taylor warranty, please see the Limited Warranty section in this manual.*

***Note:*** *Constant research results in steady improvements; therefore, information in this manual is subject to change without notice.*



***IMPORTANT!*** *If the crossed-out wheeled-bin symbol is affixed to this machine, it signifies that this machine is compliant with the EU Directives as well as other similar end-of-life legislation in effect after August 13, 2005. Therefore, it must be collected separately after its use is completed and cannot be disposed as unsorted municipal waste.*

*The user is responsible for returning the machine to the appropriate collection facility, as specified by your local code.*

*For additional information regarding applicable local disposal laws, please contact the municipal waste facility and/or local authorized Taylor distributor.*

## Compressor Warranty Disclaimer

The refrigeration compressor(s) on this unit are warranted for the term stated in the Limited Warranty section in this manual. However, due to the Montreal Protocol and the U.S. Clean Air Act Amendments of 1990, many new refrigerants are being tested and developed, thus seeking their way into the service industry. Some of these new refrigerants are being advertised as drop-in replacements for numerous applications. It should be noted that in the event of ordinary service to this unit's refrigeration system**, only the refrigerant specified on the affixed data label should be used.** The unauthorized use of alternate refrigerants will void your Taylor compressor warranty. It is the unit owner's responsibility to make this fact known to any technician he employs.



It should also be noted that Taylor does not warrant the refrigerant used in its equipment. For example, if the refrigerant is lost during the course of ordinary service to this machine, Taylor has no obligation to either supply or provide its replacement either at billable or non-billable terms. Taylor does have the obligation to recommend a suitable replacement if the original refrigerant is banned, obsoleted, or no longer available during the five-year warranty of the compressor.

The Taylor Company will continue to monitor the industry and test new alternates as they are being developed. Should a new alternate prove, through our testing, that it would be accepted as a drop-in replacement, then the above disclaimer would become null and void. To find out the current status of an alternate refrigerant as it relates to your compressor warranty, call the local Taylor distributor or the Taylor factory. Be prepared to provide the model/serial number of the unit in question.

We, at Taylor Company, are concerned about the safety of the operator when he or she comes in contact with the freezer and its parts. Taylor has gone to extreme efforts to design and manufacture built-in safety features to protect both the operator and the service technician. As an example, warning labels have been attached to the freezer to further point out safety precautions.

 **DANGER!** Failure to adhere to the following safety precautions may result in severe personal injury or death. Failure to comply with these warnings may also damage the machine and/or its components. Such damage may result in component replacement and service repair expenses**.**

 **NOTICE! DO NOT** operate this machine without reading this entire manual first. Failure to follow all of these operating instructions may result in damage to the machine, poor performance, health hazards, or personal injury.

 ***IMPORTANT!*** *This machine is to be used only by trained personnel. It is not intended for use, cleaning, or maintenance by children or people with reduced physical, sensory, or mental capabilities, or lack of experience and knowledge. Where limited equipment operation is allowed for public use, such as a self-serve application, supervision or instruction concerning the use of the appliance by a person responsible for their safety is required. Children should be supervised to ensure that they do not play with the machine.*

 ***IMPORTANT!*** *An equipotential grounding lug is provided with this machine. Some countries require the grounding lug to be properly attached to the rear of the frame by the authorized installer. The installation location is marked by the equipotential bonding symbol (5021 of IEC 60417-1) on both the removable panel and the machine's frame.*

 **WARNING! DO NOT** use a water jet to clean or rinse the machine. Failure to follow these instructions may result in serious electrical shock.

 **WARNING!** Avoid injury.

- **DO NOT** operate the machine unless it is properly grounded.
- **DO NOT** operate the machine with larger fuses than specified on the machine's data label.
- All repairs should be performed by an authorized Taylor service technician.
- The main power supplies to the machine must be disconnected prior to performing installation, repairs, or maintenance.
- **For Cord-Connected Machines:** Only authorized Taylor service technicians or licensed electricians may install a plug or replacement cord on the machine.
- Machines that are permanently connected to fixed wiring and for which leakage currents may exceed 10 mA, particularly when disconnected or not used for long periods, or during initial installation, shall have protective devices to protect against the leakage of current, such as a *Ground Fault Interrupter (*GFI), installed by the authorized personnel to the local codes.
- Stationary machines which are not equipped with a power cord and a plug or another device to disconnect the appliance from the power source must have an all-pole disconnecting device with a contact gap of at least 0.125 in. (3 mm) installed in the external installation.
- Supply cords used with this machine shall be

oil-resistant, sheathed flexible cable not lighter than ordinary polychloroprene or other equivalent synthetic elastomer-sheathed cord (code designation 60245 IEC 57) installed with the proper cord anchorage to relieve conductors from strain, including twisting, at the terminals and protect the insulation of the conductors from abrasion.

- If the supply cord is damaged, it must be replaced by an authorized Taylor service technician in order to avoid a hazard.
- Secure the supply cord ground lead to the machine in a location where if the cord is pulled, the main power leads will become taut before the ground lead can break loose.

3

Failure to follow these instructions may result in electrocution. Contact your local authorized Taylor distributor for service.



**WARNING!** Avoid injury.

- **DO NOT** allow untrained personnel to operate this machine.
- **DO NOT** operate the machine unless all service panels and access doors are restrained with screws.
- **DO NOT** remove any internal operating parts (including, but not limited to, freezer door, beater, or scraper blades), unless all control switches are in the OFF position.

Failure to follow these instructions may result in severe personal injury, especially to fingers or hands, from hazardous moving parts.



**WARNING!** This machine has many sharp edges that can cause severe injuries.

- **DO NOT** put objects or fingers in the door spout. This may contaminate the product and cause severe personal injury from blade contact.
- **USE EXTREME CAUTION** when removing the beater assembly. The scraper blades are sharp.



**CAUTION!** This machine must be placed on a level surface. Extreme care should be taken when moving for any reason. Two or more persons are required to safely move this machine. Failure to comply may result in personal injury or damage to the machine.



***IMPORTANT!*** *Access to the service area of the machine must be restricted to persons having knowledge and practical experience with the machine, in particular as far as safety and hygiene are concerned.*



**NOTICE!** Cleaning and sanitizing schedules are governed by your federal, state, or local regulatory agencies and must be followed accordingly. Please refer to the cleaning section of this manual for the proper procedure to clean this machine.



**CAUTION!** This machine is equipped with a refrigerated cabinet, designed to maintain product temperature at or below 41°F (5°C). Before replenishing the mix supply, the product must be refrigerated at or below 41°F (5°C). Failure to follow this instruction may result in health hazards and poor freezer performance.

**DO NOT** run the machine without product. Failure to follow this instruction can result in damage to the machine.

**DO NOT** obstruct air intake and discharge openings. A minimum of 3 in. (76 mm) air clearance on both sides of the machine is required. It is recommended to place the rear of the machine against the wall to prevent the recirculation of warm air. Failure to follow this instruction may cause poor freezer performance and damage to the machine.

**For Indoor Use Only:** This machine is designed to operate indoors, under normal ambient temperatures of 70°F to 75°F (21°C to 24°C). The machine has successfully performed in high ambient temperatures of up to 104°F (40°C) at reduced capacities.

**Noise Level:** Airborne noise emission does not exceed 78 dB(A) when measured at a distance of 39 in. (1.0 m) from the surface of the machine and at a height of 62 in. (1.6 m) from the floor.

## Model 702

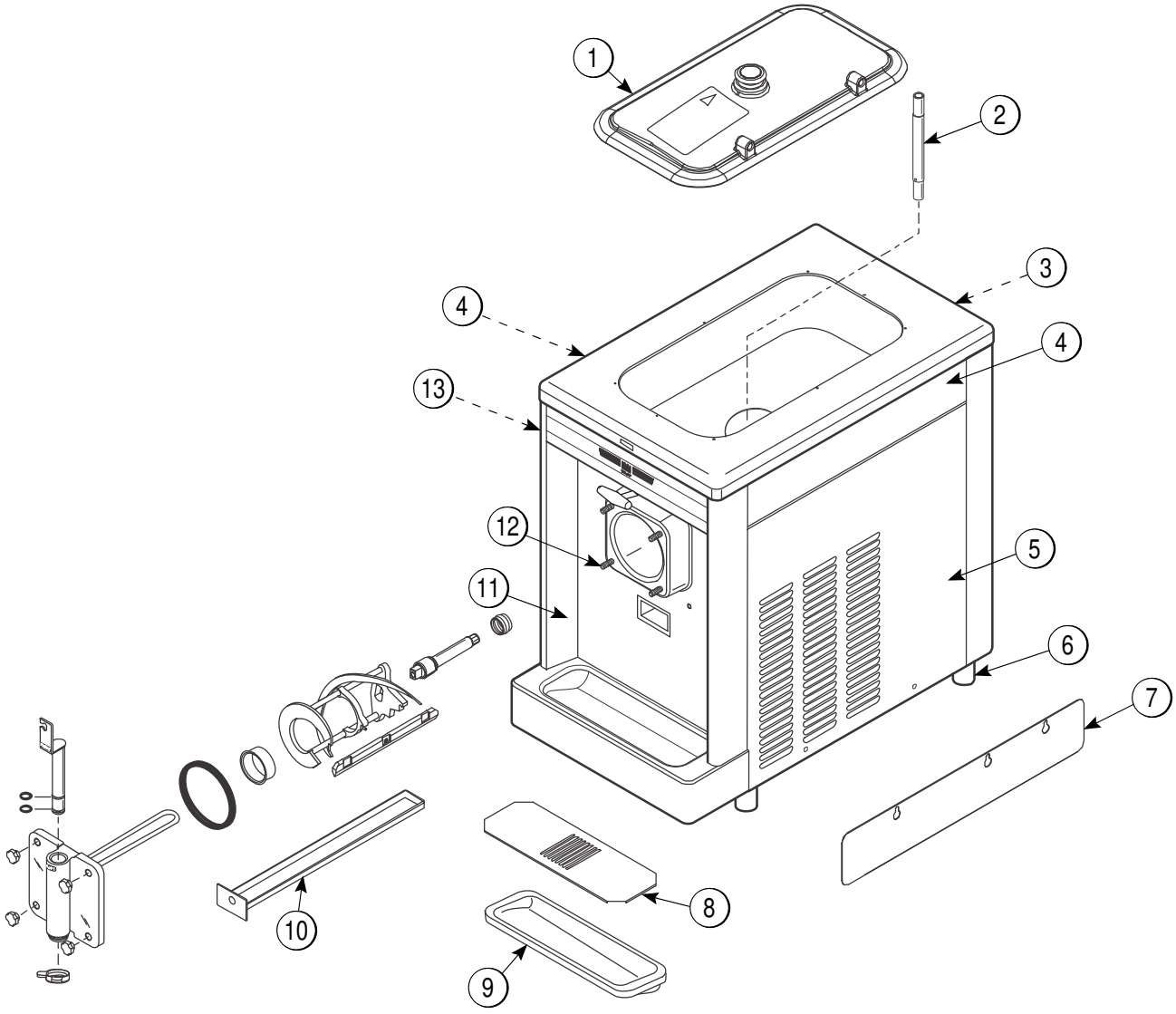


Figure 4-1

| Item | Description | Part No. |
|---|---|---|
| 1 | Kit A.-Cover-Hopper | X65368 |
| 2 | Tube-Feed-5/32 Hole SS | 028967-2 |
| 3 | Panel-Rear | 047008 |
| 4 | Panel-Side *HT*Upper | 042317 |
| 5 | Panel-Side *SS*Right | 050928-SS |
| 6 | Leg-4.250” SS-w/O-ring | 013458 |
| 7 | Skirt-Air Flow | 049069 |

| Item | Description | Part No. |
|---|---|---|
| 8 | Shield-Splash 18” | 022763 |
| 9 | Tray-Drip 14-7/8L X 5-1/8 | 013690 |
| 10 | Pan-Drip 13-1/4 Long | 039027 |
| 11 | Panel A.-Front | X50930 |
| 12 | Stud-Nose Cone | 022822 |
| 13 | Panel A.-Side Left | X81353-SER |

## Model 702 Door Assembly

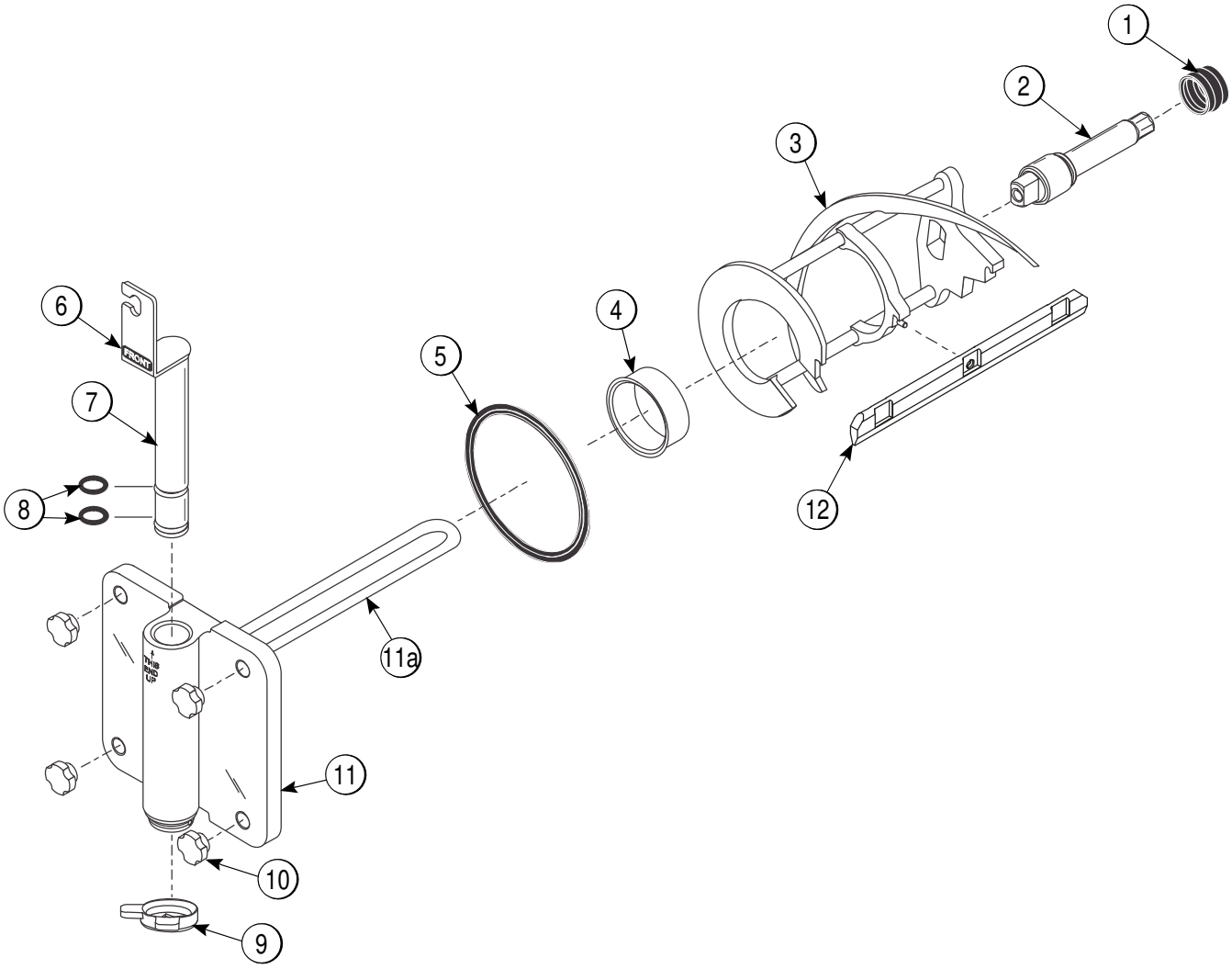


Figure 4-2

| Item | Description | Part No. |
|---|---|---|
| 1 | Seal-Drive Shaft | 032560 |
| 2 | Shaft-Beater | 033498 |
| 3 | Beater A.-4 QT. 1 Pin | X49490 |
| 4 | Bearing-Front | 013116 |
| 5 | Gasket-Door 5.177 ID | 016672 |
| 6 | Decal-Lift Plate Front | 015200 |
| 7 | Valve A.-Draw | X13624-SP |

| Item | Description | Part No |
|---|---|---|
| 8 | O-ring - 1-1/16 OD x .139 W | 084545 |
| 9 | Cap-Design- 1.188” ID 6 PT | 013139-6 |
| 10 | Nut-Stud | 021508 |
| 11 | Door A.-1 Spout-4 QT. | X30269-SER |
| 11a | Baffle A.-12 Inch | X30273 |
| 12 | Blade-Scraper-Plastic | 081094 |

## Model 741

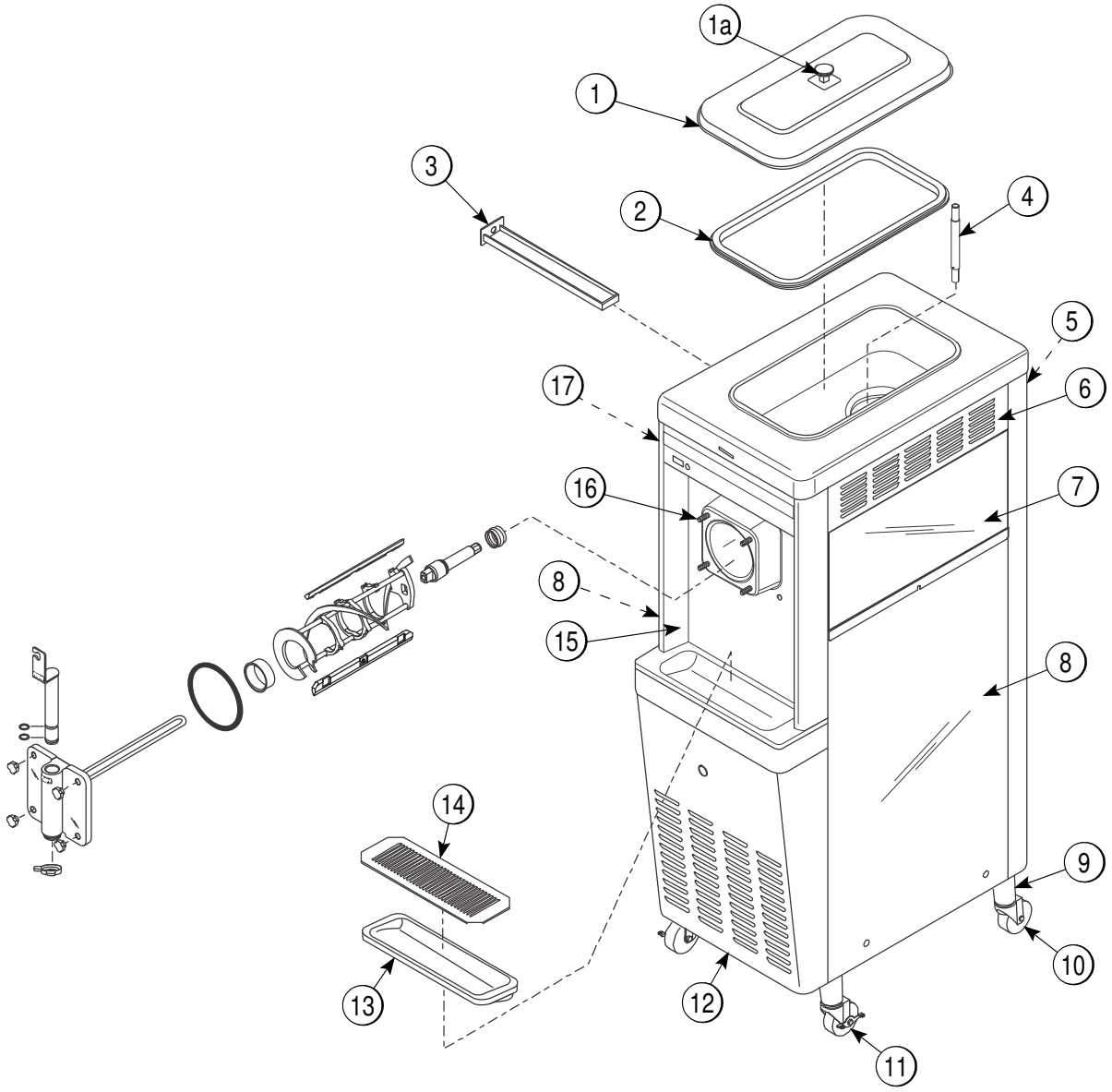


Figure 4-3

| Item | Description | Part No. |
|---|---|---|
| 1 | Cover A.-Hopper-STD | X38458-SER |
| 1a | Knob-Mix Cover | 025429 |
| 2 | Gasket-Hopper Cover | 038375 |
| 3 | Pan-Drip 11-5/8 Long | 027503 |
| 4 | Tube-Feed-SS-3/16. | 028967-3 |
| 5 | Panel-Rear | 013637 |
| 6 | Louver-Side-Top | 051192 |
| 7 | Panel-Side Upper R. | 028707 |
| 8 | Panel A.-Side Lower | X24397-SER |
| 9 | Adaptor A.-Caster | X18915 |

| Item | Description | Part No. |
|---|---|---|
| 10 | Caster-SWV 5/8 Stem | 018794 |
| 11 | Caster-4” SWV 5/8 Stem w/Brake | 034081 |
| 12 | Panel-Service | 013638 |
| 13 | Tray-Drip 14-7/8L X 5-1/8 | 013690 |
| 14 | Shield-Splash 15”L | 022763 |
| 15 | Panel A.-Front | X14238-SP |
| 16 | Stud-Nose Cone | 022822 |
| 17 | Panel-Side Upper L. | 028706 |

## Model 772

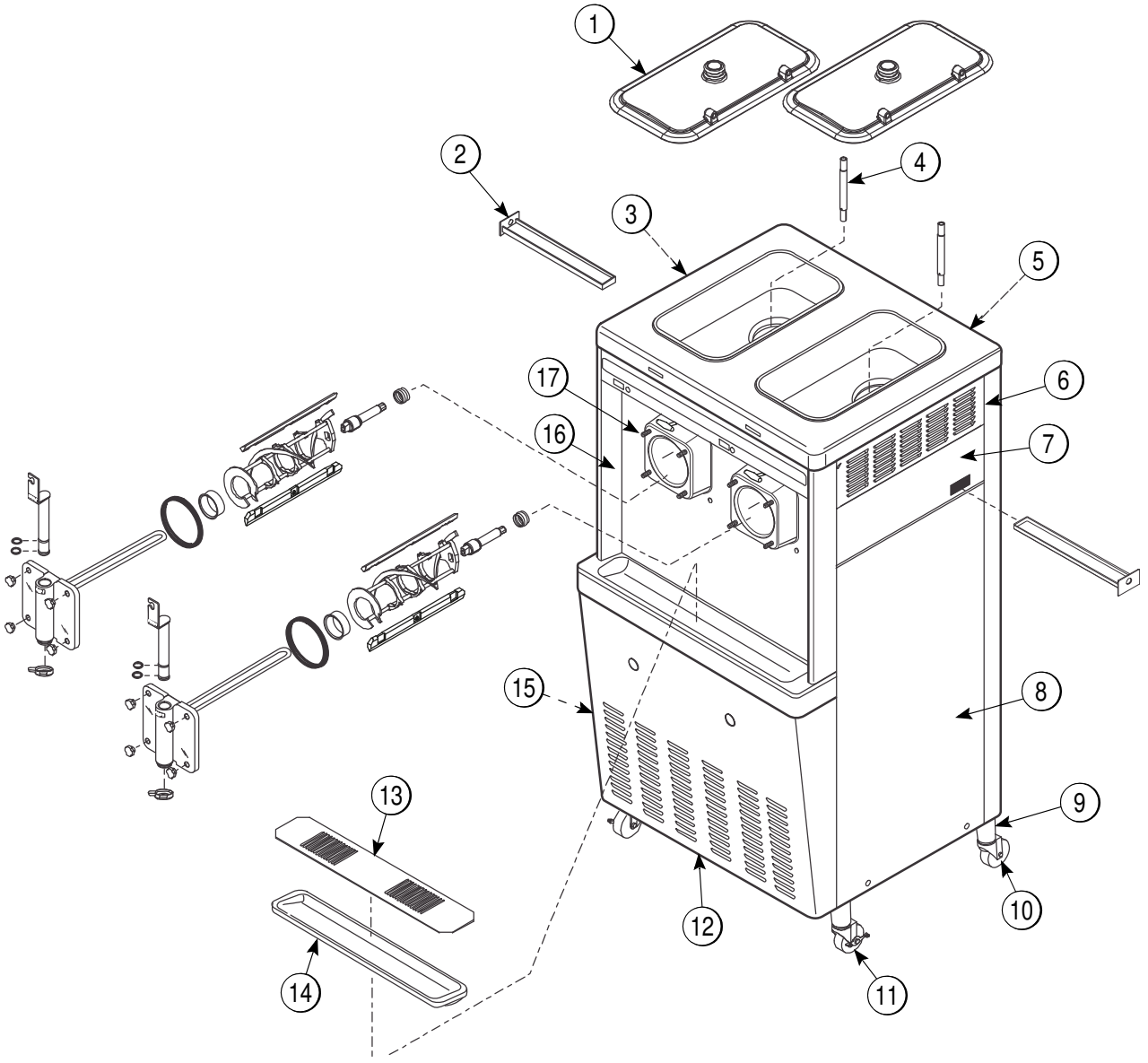


Figure 4-4

| Item | Description | Part No. |
|---|---|---|
| 1 | Kit A.-Cover-Hopper | X65368 |
| 2 | Pan-Drip 11-5/8 Long | 027503 |
| 3 | Panel-Upper Side L. | 028700 |
| 4 | Tube-Feed-SS-3/16 | 028967-3 |
| 5 | Panel-Rear | 017563 |
| 6 | Louver-Side-Top | 051191 |
| 7 | Panel-Upper Side R. | 028701 |
| 8 | Panel A.-Side Right | X44855-SER |
| 9 | Adaptor A.-Caster | X18915 |

| Item | Description | Part No. |
|---|---|---|
| 10 | Caster-4” SWV 5/8 Stem | 018794 |
| 11 | Caster-4” SWV 5/8 Stem w/Brake | 034081 |
| 12 | Panel-Service | 046584 |
| 13 | Shield-Splash | 037041 |
| 14 | Tray-Drip | 014533 |
| 15 | Panel A.-Side Left | X44853-SER |
| 16 | Panel A.-Front | X51264 |
| 17 | Stud-Nose Cone | 022822 |

## Model 741 & 772 Door Assembly

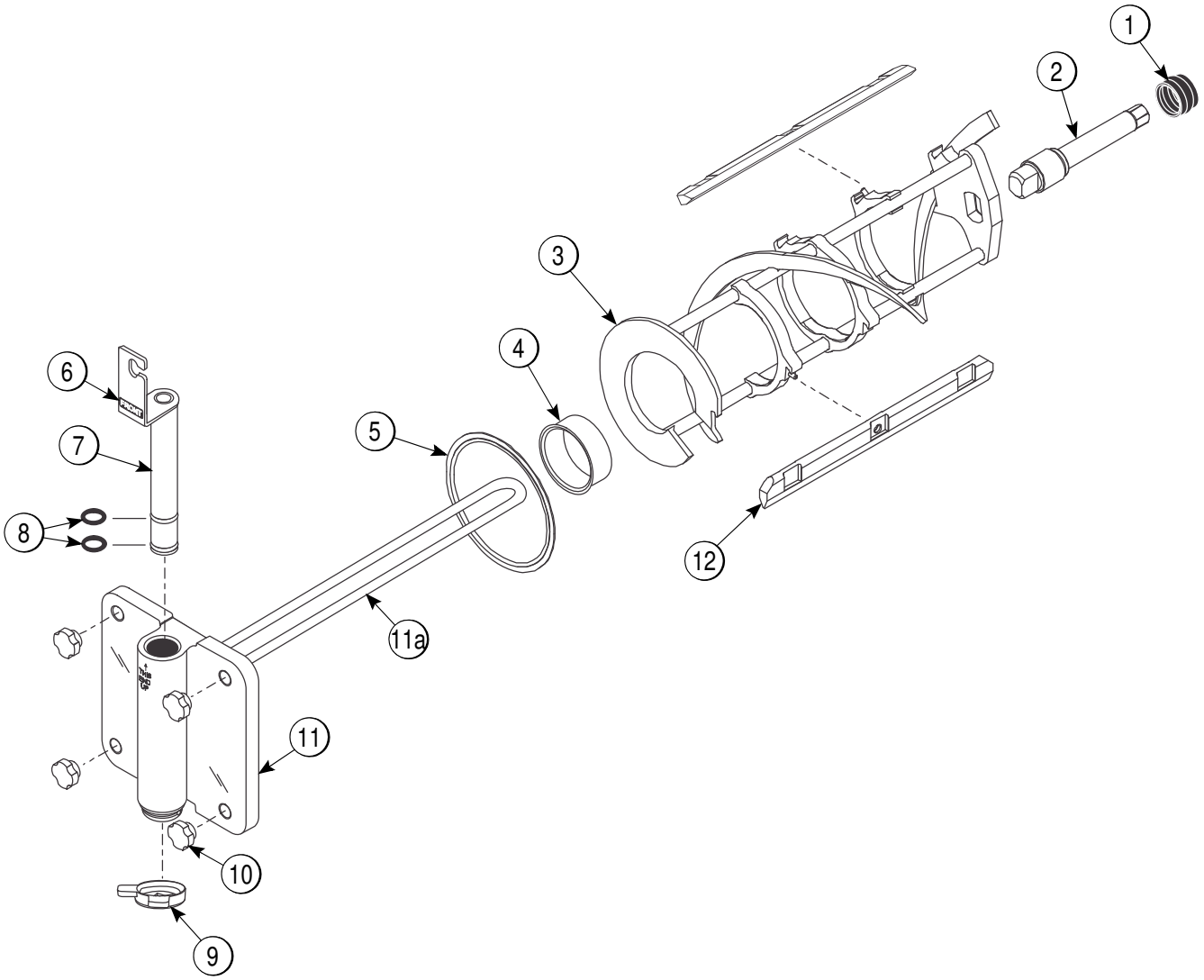


Figure 4-5

| Item | Description | Part No. |
|---|---|---|
| 1 | Seal-Drive Shaft | 032560 |
| 2 | Shaft-Beater | 033498 |
| 3 | Beater A.-7 QT. 1 Pin | X46233 |
| 4 | Bearing-Front | 013116 |
| 5 | Gasket-Door 5.177 ID | 016672 |
| 6 | Decal-Lift Plate Front | 015200 |
| 7 | Valve A.-Draw | X13624-SP |

| Item | Description | Part No. |
|---|---|---|
| 8 | O-ring 1-1/16 OD X 139 W | 084545-SER |
| 9 | Cap-Design-1.188” ID 6 PT | 013139-6 |
| 10 | Nut-Stud | 021508 |
| 11 | Door A.-1 Spout 7 QT. | X30272-SER |
| 11a | Baffle A.-19 Inch | X30274 |
| 12 | Blade-Scraper-Plastic | 081094 |

## Indicator Light—MIX LOW

The Models 702, 741, and 772 are equipped with a MIX LOW light located on the front of the machine. When the light begins to flash, it indicates that the mix hopper has a low supply of mix. At this time, the hopper should be filled with mix. If you neglect to add mix when the light begins to flash, eventual damage to the beater, blades, drive shaft, and freezer door may occur.

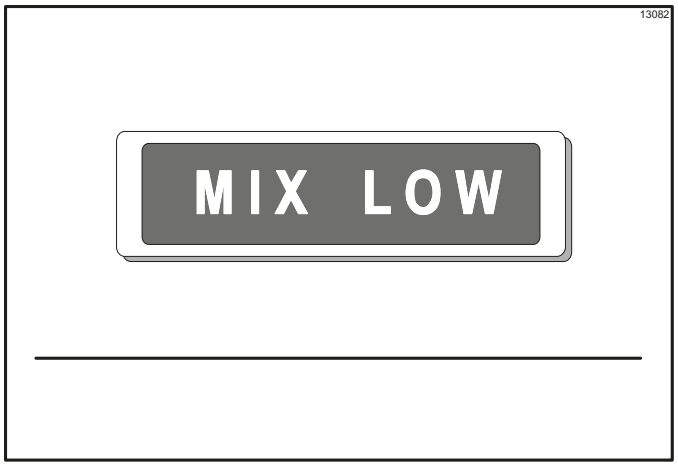


Figure 5-1

## Symbol Definitions

The following chart identifies the symbol definitions used on the operator switches.

= WASH keypad

= OFF keypad

= ON/AUTO keypad

## Control Switch

The **center** position is OFF. The **right** position is AUTO, which activates the beater motor and the refrigeration system. The **left** position is WASH, which activates the beater motor only.




Figure 5-2

## Reset Button

On a Model 702, the reset button is located under the left upper side panel. On the Model 772 and the Model 741, the reset button is located on the lower front panel.

The reset button protects the beater motor from an overload condition. If an overload occurs, the reset mechanism will trip. To properly reset the freezer, place the control switch in the OFF position. Press the reset button firmly. Place the control switch in the WASH position and observe the freezer's performance. Once satisfied, place the control switch back in the AUTO position.

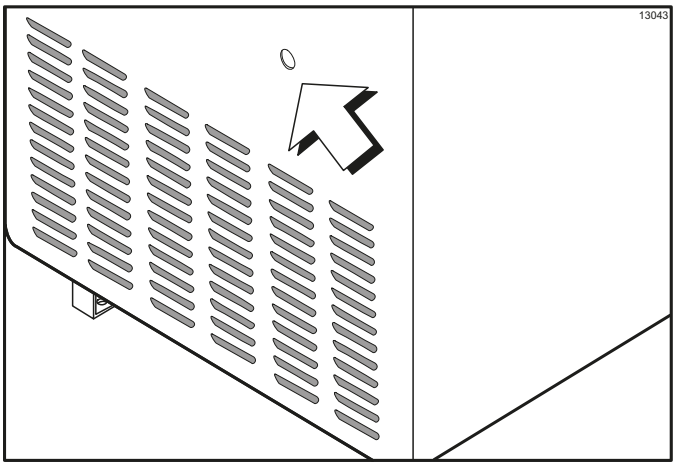


Figure 5-3

## Thermistor Control

The viscosity (thickness) of the product is controlled by a temperature-sensing device called the thermistor. To achieve a thicker product, turn the control **clockwise**; to achieve a thinner product, turn the control **counterclockwise**. Allow the refrigeration system to cycle on and off two or three times before an accurate consistency can be evaluated.

5

## Separate Hopper Refrigeration (SHR) System

### Standby

The separate hopper refrigeration (SHR) system and the cylinder temperature retention (CTR) system are standard features. This feature is referred to as standby. The SHR incorporates the use of a separate small refrigeration system to maintain the mix temperature in the hopper to below 40°F (4.4°C) This ensures bacteria control. The CTR works with the SHR to maintain a good quality product. During long “no sale” periods, it becomes necessary to warm the product in the freezing cylinder to approximately 35°F to 40°F

(1.7°C to 4.4°C) to prevent overbeating and product breakdown.

**ALWAYS FOLLOW LOCAL HEALTH CODES.**

Cleaning and sanitizing schedules are governed by federal, state, or local regulatory agencies, and must be followed accordingly. If the unit has a Standby mode, it must not be used instead of proper cleaning and sanitizing procedures and frequencies set forth by the ruling health authority.

***IMPORTANT!*** *Cleaning and sanitizing must be performed daily.*

***IMPORTANT!*** *If this machine is freshly sanitized, make sure your hands are sanitized before continuing these instructions. Failure to follow this instruction may result in health hazard*s.

To activate SHR and CTR, place the air tube (end without the hole) into the mix inlet hole.

Place the control switch in the AUTO position, and turn the STANDBY switch to the ON position. The unit will operate as a refrigerator for product in the hopper and freezing cylinder.

To remove the unit from the STANDBY mode, place the control switch in the AUTO position, and turn the STANDBY switch to the OFF position. The unit will resume the normal operating mode.

When the unit cycles off, remove the hopper cover and place the feed tube in its original position.

Replace the hopper cover.

The Model 702 has been selected to show you the pictured step-by-step operating procedures for all models contained in this manual. These models, for practical purposes of operation, are the same.

Each model stores 20 quarts (18.9 liters) of mix in the hopper. The mix then flows **by gravity** through a mix feed tube down into the freezing cylinder.

Locate your model number below to determine the characteristics of your freezer.

702: One 4 qt. (3.8 L) freezing cylinder.

741: One 7 qt. (6.6 L) freezing cylinder.

772: Two 7 qt. (6.6 L) freezing cylinders.

We begin our instructions at the point where we enter the store in the morning and find the parts disassembled and laid out to air dry from the previous night's cleaning.

The following procedures will show you how to assemble the parts into the freezer, sanitize them, and prime the freezer with **fresh** mix in preparation to serve your first portion.

If you are disassembling the machine for the first time or need information to get to this starting point in our instructions, turn to "Disassembly" on page 4-8 and start there.

## Assembly

**WARNING!** Make sure the control switch is in the OFF position to eliminate the chance of moving parts. Failure to follow this instruction may result in severe personal injury from hazardous moving parts.

***Note:*** *When lubricating parts, use an approved food grade lubricant (example: Taylor Lube).*

1. Lubricate the groove and shaft portion that comes in contact with the bearing on the beater drive shaft. Slide the seal over the shaft and groove until it fits into place. **Do not** lubricate the hex end of the drive shaft. Fill the inside portion of the seal with 1/4 in. more lubricant and evenly lubricate the flat side of the seal that comes in contact with the bearing.

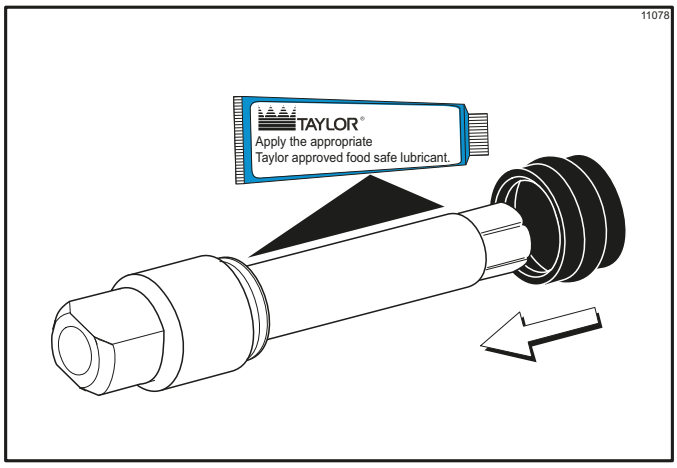


Figure 6-1

2. Insert the drive shaft through the rear shell bearing in the freezing cylinder and engage the hex end firmly into the gear box coupling.

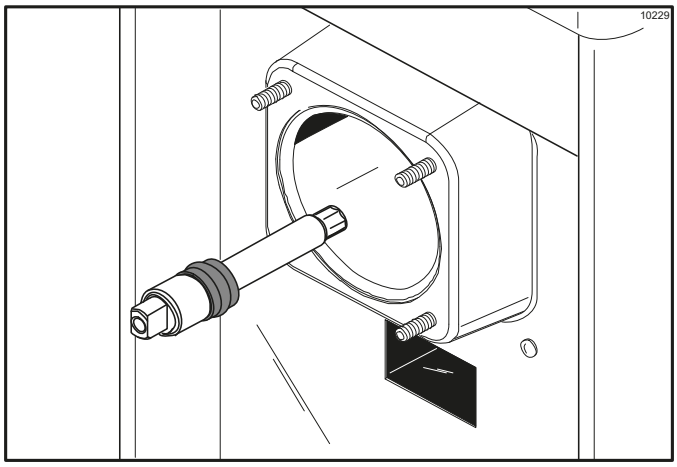


Figure 6-2

**WARNING!** Use extreme caution when handling the beater assembly. The scraper blades are sharp and may cause injury.

3. Before installing the beater assembly, check the scraper blades for any signs of wear or damage. If a scraper blade is nicked or worn, replace both blades.

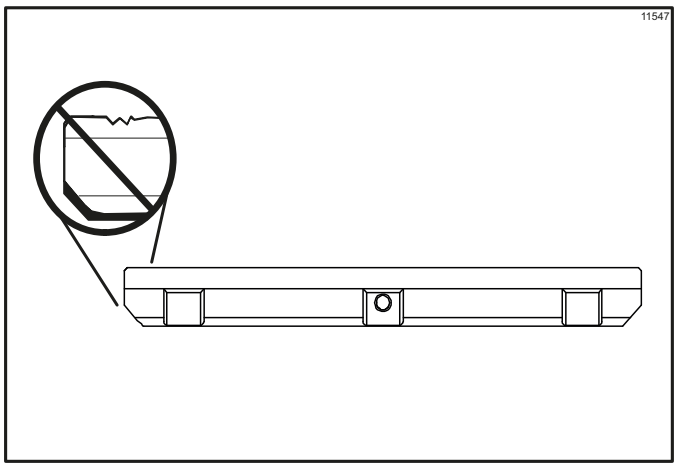


Figure 6-3

If the blades are in good condition, place the rear scraper blade over the rear holding pin on the beater, with the knife edge facing outward.

***Note:*** *To prevent costly damage, the hole in the scraper blade must fit securely over the pin.*

Holding the rear blade on the beater, slide the assembly halfway into the freezing cylinder. Install the front scraper blade over the front holding pin. Slide the beater assembly the rest of the way into the freezing cylinder.

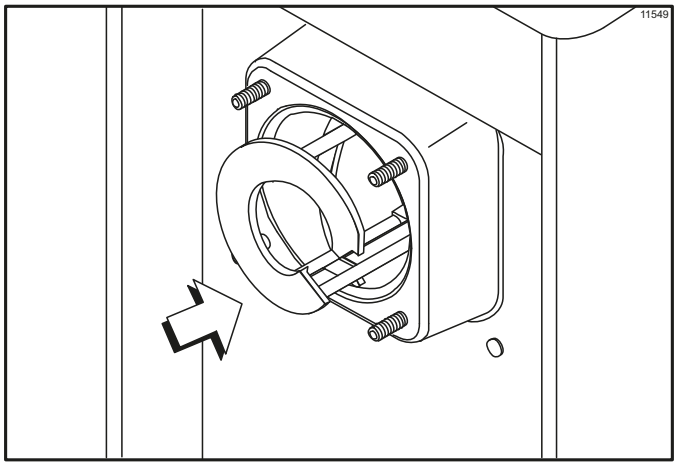


Figure 6-4

Make sure the beater assembly is in position over the drive shaft. Turn the beater slightly to be certain that the beater is properly seated. When in position, the beater will not protrude beyond the front of the freezing cylinder.

4. Before assembling the freezer door, check the following for any nicks, cracks, or signs of wear: front bearing, door gasket, draw valve, O-rings, and all sides of the door assembly, including the inside of the draw valve bore. Replace any damaged parts.

5. Slide the two O-rings into the grooves on the draw valve and lubricate them with Taylor Lube.

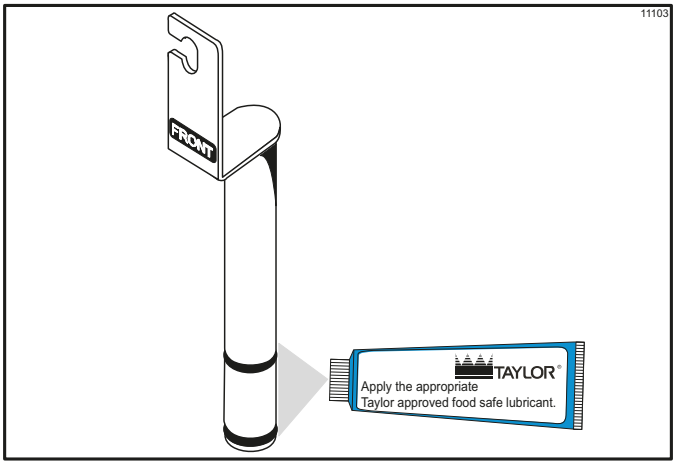


Figure 6-5

Lubricate the inside of the freezer door spout, top and bottom. Insert the draw valve into the freezer door from the **top**. It will be necessary to rotate the draw valve to the **right** when assembling the door to the freezer.

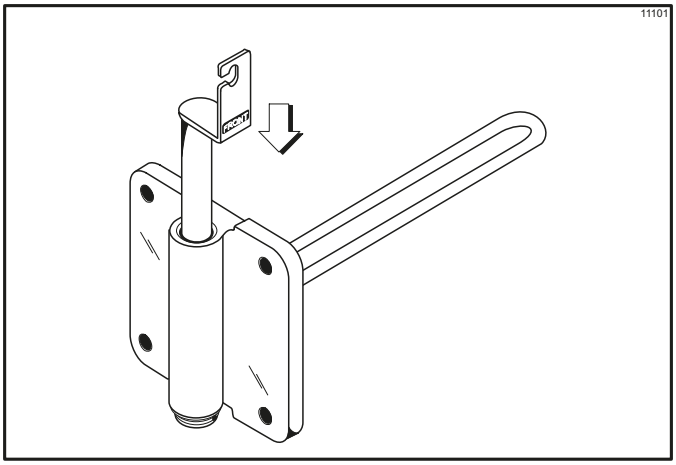


Figure 6-6

6. Place the freezer door gasket into the groove on the back of the freezer door. Slide the front bearing over the baffle rod so the flanged edge is against the door. **Do not lubricate the gasket or bearing.**

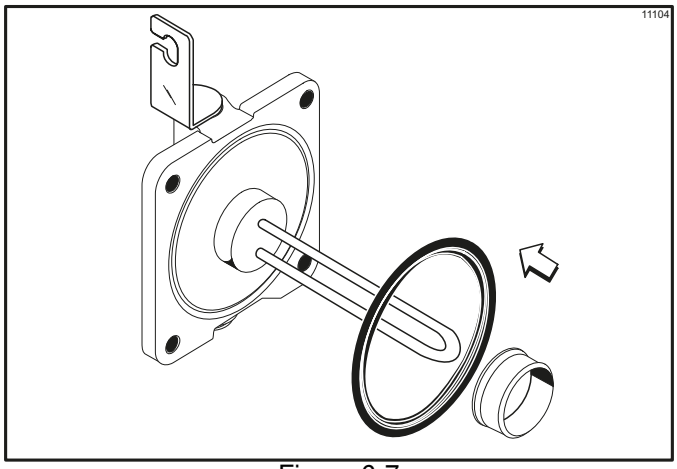


Figure 6-7

7. Insert the baffle rod through the beater in the freezing cylinder. With the door seated on the freezer studs, install the handscrews. Tighten equally in a crisscross pattern to ensure that the door is secured.

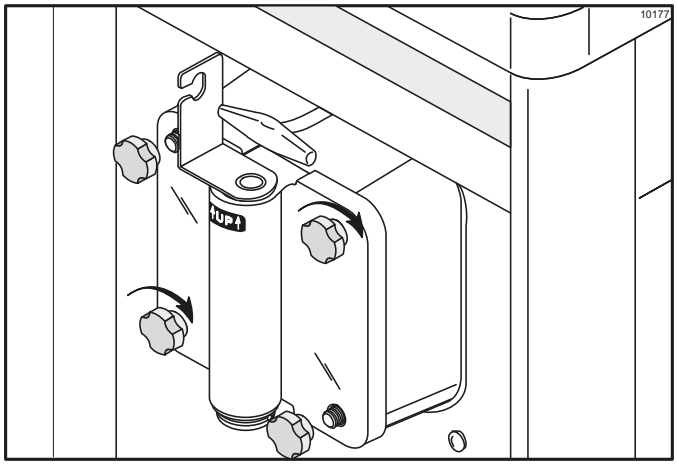


Figure 6-8

8. Rotate the draw valve bracket to the **left.** Center it into position by raising the draw arm and placing it into the slotted groove of the draw valve bracket.

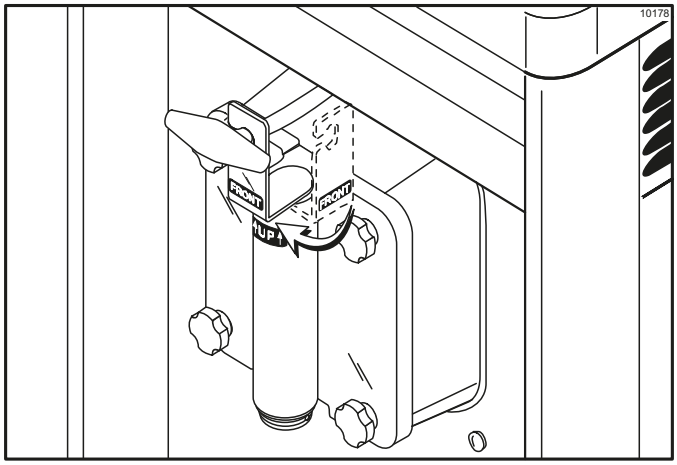


Figure 6-9

9. Snap the design cap over the end of the door spout.

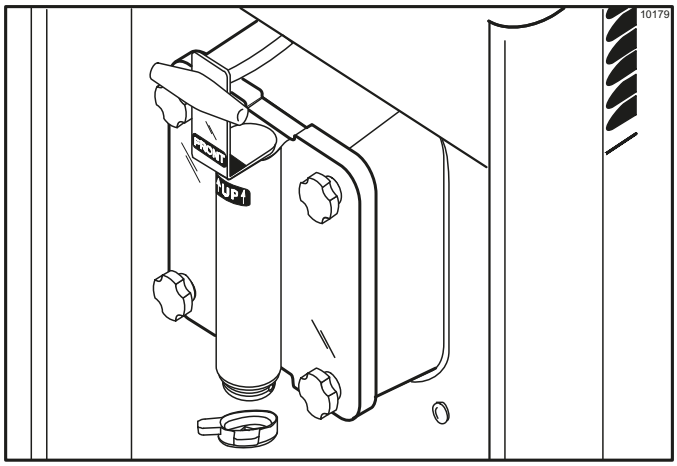


Figure 6-10

10. Lay the mix feed tube and the hopper gasket in the bottom of the mix hopper.

**Repeat steps 1 through 9** for the other side of the freezer on Model 772.

11. Install the front drip tray and splash shield under the door spout(s).

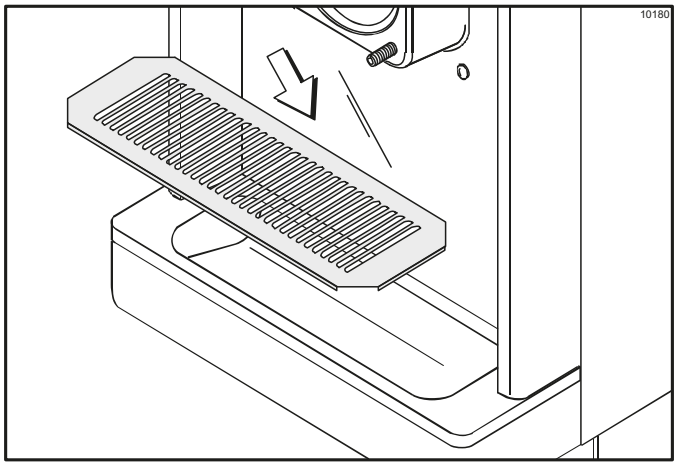


Figure 6-11

12. Slide the rear drip pan into the hole(s) in the side panel.

## Sanitizing

1. Prepare a pail of an approved 100 PPM sanitizing solution (examples: 2-1/2 gal. [9.5 L] of Kay-5® or 2 gal. [7.6 L] of Stera-Sheen®).

   ***Important!*** *Use warm water and follow the manufacturer's specifications.*

2. Pour the sanitizing solution into the hopper and allow it to flow into the freezing cylinder.

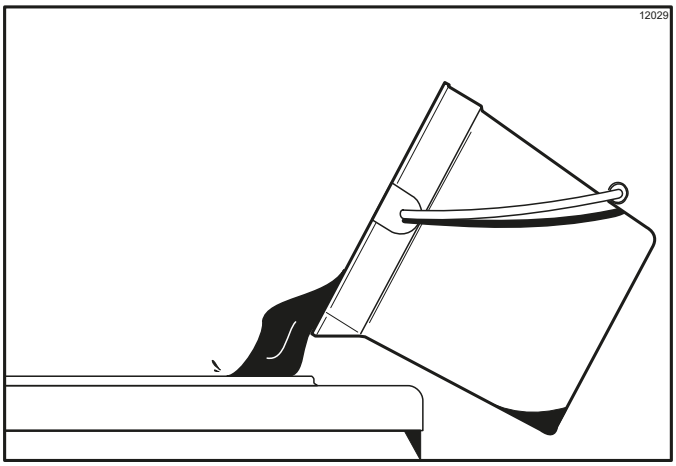


Figure 6-12

3. While the solution is flowing into the freezing cylinder, brush clean the hopper. While cleaning the mix hopper, take particular care in brushing the mix level sensing probe on the rear wall of the hopper, the mix inlet hole, the hopper gasket, and the mix feed tube.

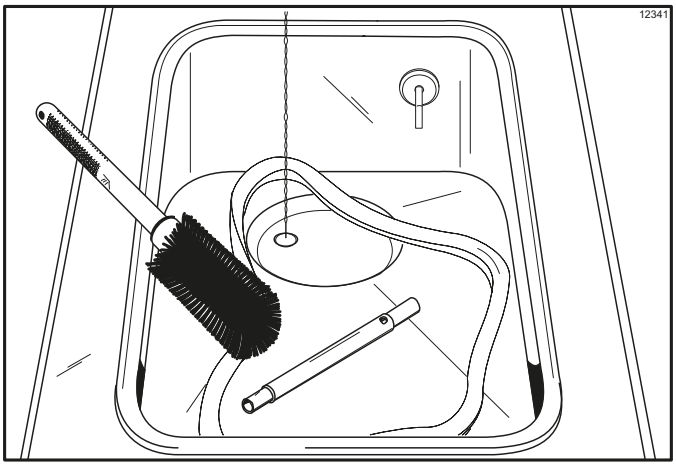


Figure 6-13

4. Place the control switch in the WASH position. This will cause the sanitizing solution in the freezing cylinder to agitate. Allow the solution to agitate for 5 minutes.




Figure 6-14

5. Place an empty pail beneath the door spout and raise the draw arm. Draw off all the sanitizing solution.

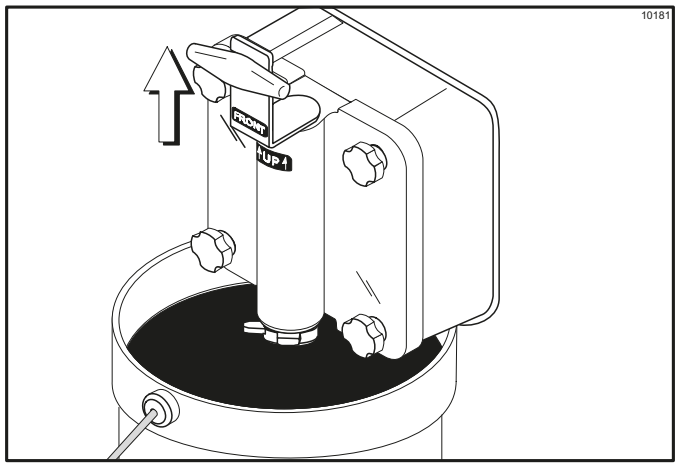


Figure 6-15

6. When the sanitizer stops flowing from the door spout, lower the draw arm and place the control switch in the OFF position.

   ***Important!*** *The unit must* ***not*** *be placed in AUTO until all sanitizing solution has been removed from the freezing cylinder and proper priming procedures have been completed. Failure to follow this instruction may result in damage to the freezing cylinder.*

***IMPORTANT!*** *If this machine is freshly sanitized, make sure your hands are sanitized before continuing these instructions. Failure to follow this instruction may result in health hazards.*

7. Stand the mix feed tube in the corner of the mix hopper, and assemble the hopper gasket.

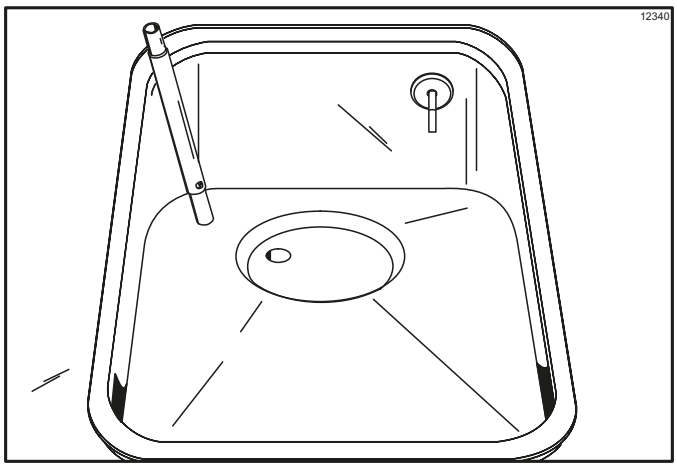


Figure 6-16

**Repeat steps 1 through 7** for the other side of the freezer on Model 772.

## Priming

Prime the machine as close to the time of first product draw as possible.

1. Place a pail beneath the door spout and raise the draw arm. Pour 2 gal. (7.6 L) of **fresh** mix into the hopper and allow it to flow down into the freezing cylinder. This will force out any remaining sanitizing solution. When full-strength mix is flowing from the door spout, lower the draw arm.

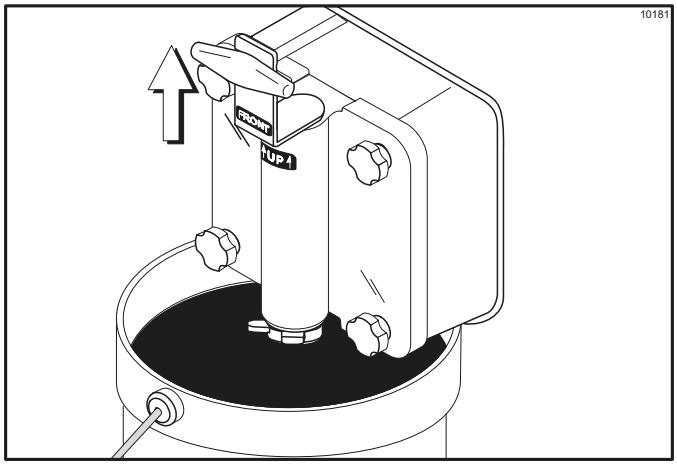


Figure 6-17

***Important!*** *Failure to remove all sanitizing solution may result in damage to the freezing cylinder.*

2. When the mix has stopped bubbling down into the freezing cylinder, install the mix feed tube into the mix inlet hole.

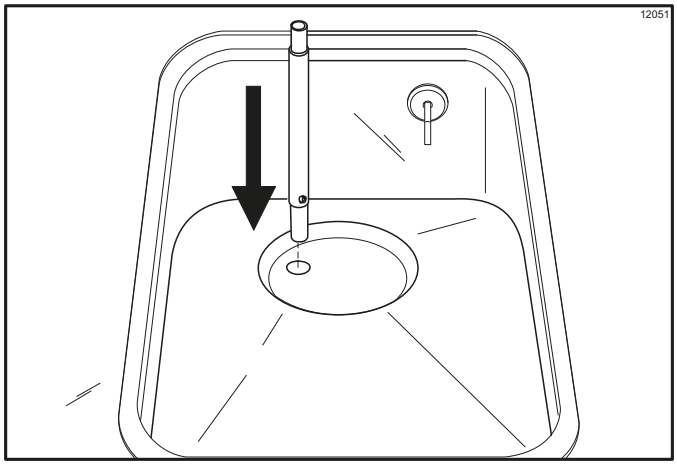


Figure 6-18

3. Place the control switch in the AUTO position. When the unit cycles off, the product will be at serving temperature.




Figure 6-19

4. Fill the hopper with mix. As the mix level comes in contact with the mix level sensing probe on the rear wall of the hopper, the MIX LOW light will extinguish.

5. Place the mix hopper cover in position.

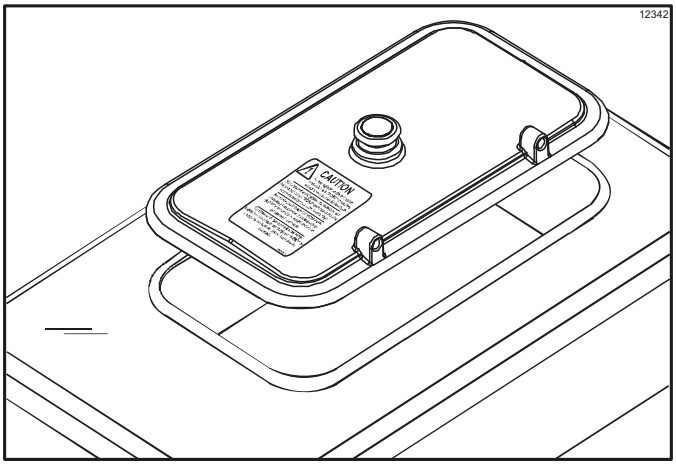


Figure 6-20

**Repeat steps 1 through 5** for the other side of the freezer on Model 772.

## Closing Procedures

To disassemble this unit, the following items will be needed.

- Two cleaning pails
- Sanitized stainless steel rerun can with lid
- Necessary brushes (provided with freezer)
- Cleaner
- Single-service towels

6

## Draining Product from the Freezing Cylinder

1. Place the control switch in the OFF position.
2. Remove the hopper cover, the hopper gasket, and the mix feed tube. Take these parts to the sink for cleaning.
3. **If local health codes permit the use of rerun,** place a sanitized, NSF-approved stainless steel rerun container beneath the door spout. Place the control switch in the WASH position and raise the draw arm. When all product stops flowing from the door spout, lower the draw arm and place the control switch in the OFF position. Place a sanitized lid on the rerun container and place it in the walk-in cooler.

   ***Note:*** For additional information regarding the proper use of rerun, see item 5 on page 4-3.

***Note:*** *If local health codes **do not** permit the use of rerun, the product must be discarded**.** Follow the instructions in step 3, except drain the product into a pail and properly discard the mix.*

**Repeat steps 1 through 3** for the second freezing cylinder on Model 772.

**ALWAYS FOLLOW LOCAL HEALTH CODES.**

## Rinsing

1. Pour 2 gal. (7.6 L) of **cool**, clean water into the mix hopper. With the brushes provided, scrub the mix hopper, mix inlet hole, and mix level sensing probe.
2. With a pail beneath the door spout, place the control switch in the WASH position and raise the draw arm. Drain all the rinse water from the freezing cylinder. When the rinse water stops flowing from the door spout, lower the draw arm and place the control switch in the OFF position.
3. Repeat steps 1 and 2 until the rinse water being drawn from the freezing cylinder is **clear**.

**Repeat steps 1 through 3** for the second freezing cylinder on Model 772.

## Cleaning

1. Prepare an approved 100 PPM sanitizing solution (examples: 2-1/2 gal. [9.5 L] of Kay-5® or 2 gal. [7.6 L] of Stera-Sheen®).

   ***Important!*** *Use warm water and follow the manufacturer's specifications.*
2. Pour the cleaning solution into the hopper and allow it to flow into the freezing cylinder.
3. While the solution is flowing into the freezing cylinder, brush clean the mix hopper, mix inlet hole, and mix level sensing probe.
4. Place the control switch in the WASH position. This will cause the cleaning solution in the freezing cylinder to agitate.
5. Place an empty pail beneath the door spout and raise the draw arm. Draw off all the cleaning solution. When the solution stops flowing from the door spout, lower the draw arm and place the control switch in the OFF position.

**Repeat steps 1 through 5** for the second freezing cylinder on Model 772.

## Disassembly

***Note:*** *Failure to remove, brush clean, and air dry parts will result in damage to the parts.*

**WARNING!** Make sure the control switch is in the OFF position to eliminate the chance of moving parts. Failure to follow this instruction may result in severe personal injury from hazardous moving parts.

1. Remove the handscrews, freezer door, gasket, front bearing, beater, scraper blade(s), and drive shaft from the freezing cylinder. Take these parts to the sink for cleaning.
2. Remove the rear drip pan from the front panel.

   ***Note:*** *If the drip pan is filled with an excessive amount of mix, the drive shaft seal should be replaced or was improperly lubricated.*

**Repeat steps 1 and 2** for the second freezing cylinder on Model 772.

3. Remove the front drip tray and the splash shield.

## Brush Cleaning

1. Prepare a sink with a cleaning solution (examples: Kay-5® or Stera-Sheen®).

   ***Important!*** *Use warm water and follow the manufacturer's specifications.*

   ***Important!*** *If an approved cleaner other than Kay-5® or Stera-Sheen® is used, dilute it according to the label instructions.*

   ***Important!*** *Follow the label directions. Too **strong** of a solution can cause parts damage. Too **mild** of a solution will not provide adequate cleaning.*

   Make sure all brushes provided with the freezer are available for brush cleaning.
2. Remove the seal(s) from the drive shaft(s).
3. Remove these items from the freezer door(s).
   - Gasket(s)
   - Front bearing(s)
   - Design cap(s)
   - Draw valve(s)
4. Remove all O-rings.

   ***Note:*** *To remove O-rings, use a single-service towel to grasp the O-ring. Apply pressure in an upward direction until the O-ring pops out of its groove. With the other hand, push the top of the O-ring forward. It will roll out of the groove and can be easily removed. If there is more than one O-ring to be removed, always remove the rear O-ring first. This will allow the O-ring to slide over the forward rings without falling into the open grooves.*
5. Thoroughly brush clean all disassembled parts in the cleaning solution, making sure all lubricant and mix film is removed. Take particular care to brush clean the draw valve core in the freezer door(s). Place all the cleaned parts on a clean, dry surface to air dry overnight.
6. Return to the freezer with a small amount of cleaning solution. With the black bristle brush, brush clean the rear shell bearing(s) at the back of the freezing cylinder(s).

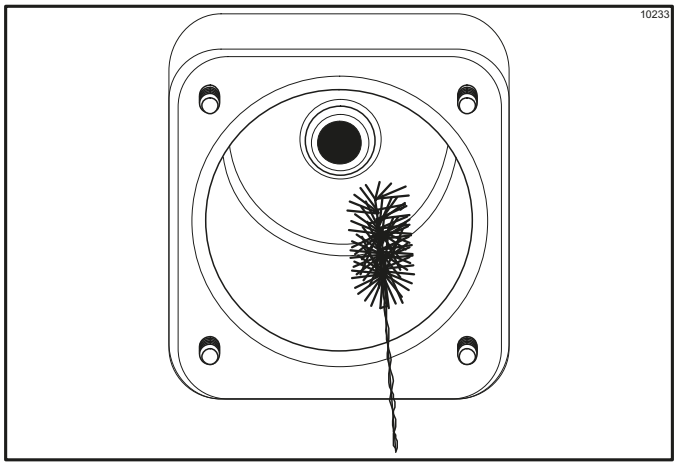


Figure 6-21

7. Wipe clean all exterior surfaces of the freezer.

# Notes:

## During Cleaning and Sanitizing



**ALWAYS FOLLOW LOCAL HEALTH CODES.**

Cleaning and sanitizing schedules are governed by federal, state, or local regulatory agencies, and must be followed accordingly. If the unit has a Standby mode, it must not be used instead of proper cleaning and sanitizing procedures and frequencies set forth by the ruling health authority. The following checkpoints should be stressed during the cleaning and sanitizing operations.

## Troubleshooting Bacterial Count

- ☐ Thoroughly clean and sanitize the machine regularly, including complete disassembly and brush cleaning.
- ☐ Use all brushes supplied for thorough cleaning. The brushes are specially designed to reach all mix passageways.
- ☐ Use the white bristle brush to clean the mix inlet hole, which extends from the mix hopper down to the rear of the freezing cylinder.
- ☐ Use the black bristle brush to thoroughly clean the rear shell bearing located at the rear of the freezing cylinder. Make sure there is a generous amount of cleaning solution on the brush.
- ☐ If local health codes permit the use of rerun, make sure the mix rerun is stored in a sanitized, covered stainless steel container and used the following day. **Do not** prime the machine with rerun. When using rerun, skim off the foam and discard, then mix the rerun with **fresh** mix in a ratio of 50:50 during the day's operation.
- ☐ On a designated day of the week, run the mix as low as feasible and discard after closing. This will break the rerun cycle and reduce the possibility of high bacteria and coliform counts.
- ☐ Properly prepare the cleaning and sanitizing solutions. Read and follow label directions carefully. Too **strong** of a solution may damage the parts, and too **weak** of a solution will **not** adequately clean or sanitize them.
- ☐ The temperature of mix in the mix hopper and walk-in cooler should be below 40°F (4.4°C).

## Regular Maintenance Checks

- ☐ Rotate scraper blades to allow both sides of the knife edge to wear evenly. This will contribute to self-sharpening and help maintain fast, efficient freezing.
- ☐ Replace scraper blades that are nicked, damaged, or worn down.
- ☐ Before installing the beater, make sure the scraper blade is properly attached over the pins.
- ☐ Check the rear shell bearing for signs of wear (excessive mix leakage in rear drip pan) and make sure it is properly cleaned.
- ☐ Using a screwdriver and cloth towel, keep the rear shell bearing and the female hex drive socket clean and free of lubricant and mix deposits.
- ☐ Dispose of O-rings and seals if they are worn, torn, or fit too loosely, and replace them with new ones.
- ☐ Follow all lubricating procedures outlined in "Assembly" on page 6-1.

***Note:*** *Check the condensers for accumulation of dirt and lint. Dirty condensers will reduce the efficiency and capacity of the machine. Condensers should be cleaned* ***monthly*** *with a soft brush.* ***Never*** *use screwdrivers or other metal probes to clean between the fins.*
***Note:*** *For machines equipped with an air filter, it will be necessary to vacuum clean the filters on a monthly schedule.*

- ☐ On water-cooled units, check the water lines for kinks or leaks. Kinks can occur when the machine is moved back and forth for cleaning or maintenance purposes. Deteriorated or cracked water lines should be replaced only by an authorized Taylor technician.

## Winter Storage

If the place of business is to be closed during the winter months, it is important to protect the freezer by following certain precautions, particularly if the building is subject to freezing conditions.

Disconnect the freezer from the main power source to prevent possible electrical damage.

On water-cooled freezers, disconnect the water supply. Relieve pressure on the spring in the water valve. Use air pressure on the outlet side to blow out any water remaining in the condenser. **This is extremely important.** Failure to follow this procedure may cause severe and costly damage to the refrigeration system.

Your local Taylor distributor can perform this service for you.

Wrap detachable parts of the freezer such as the beater, blades, drive shaft, and freezer door. Place these parts in a protected, dry place. Rubber trim parts and gaskets can be protected by wrapping them with moisture-proof paper. All parts should be thoroughly cleaned of dried mix or lubrication, which attract mice and other vermin.

Table 8-1

| Problem | Probable Cause | Remedy | Page Ref. |
|---|---|---|---|
| 1. No product being dispensed with the draw valve open and the control switch in AUTO. | a. The freezer door is installed upside down. | a. Install the door correctly. | 6-2 |
| | b. There is a freeze-up in the mix inlet hole. | b. Call service technician to adjust the hopper temperature. | – – |
| | c. The beater motor is out on reset. | c. Reset the freezer. | 5-1 |
| | d. The beater is rotating counterclockwise. | d. Contact service technician to correct the rotation to clockwise. | – – |
| | e. The draw valve is connected to the draw arm incorrectly. | e. The draw valve bracket must be correctly attached to the draw arm. | 6-2 |
| | f. The circuit breaker is off or the fuse is blown. | f. Turn the breaker on or replace the fuse. | – – |
| | g. Inadequate mix in hopper. | g. Fill the hopper with mix. | 5-1 |
| 2. The product is too cold. | a. The temperature control is set too cold. | a. Adjust the temperature control knob warmer. | 5-2 |
| | b. The draw handle is not fully closed. | b. The draw handle must be fully closed. | – – |
| 3. The product appears too soft. | a. The temperature control is set too warm. | a. Adjust the temperature control knob colder. | 5-2 |
| | b. Insufficient air space around the unit (A/C). | b. Allow for adequate air flow across the condenser. | 1-1 |
| | c. The scraper blade(s) are worn. | c. Replace scraper blades regularly. | 6-1 |
| | d. Dirty condenser. | d. Clean regularly. | 7-1 |
| | e. The mix is out of date. | e. Use only **fresh** mix. | – – |
| | f. The beater is rotating counterclockwise. | f. Contact service technician to correct rotation. | – – |
| | g. Loss of water (W/C) | g. Locate cause of water loss and correct. | 7-2 |
| | h. Product is broken down from overbeating. | h. Draw off some product to allow fresh product to enter the freezing cylinder. | – – |
| 4. The mix in the hopper is too cold. | a. The temperature is out of adjustment. | a. Call service technician to adjust the hopper temperature. | – – |
| 5. The mix in the hopper is too warm. | a. The temperature is out of adjustment. | a. Call service technician to adjust the hopper temperature. | – – |
| | b. Hopper cover is not in position. | b. Place the cover in position. | 6-6 |
| | c. The control switch is off. | c. Place the control switch in AUTO. | 6-5 |
| | d. Warm mix was placed in the hopper. | d. Mix added to the hopper must be below 40°F (4.4°C). | – – |
| 6. The drive shaft is stuck in the gear box coupling. | a. Rounded corners of drive shaft, coupling, or both. | a. Call service technician to correct the cause and replace the necessary components. **Do not** lubricate the end of the drive shaft. | – – |

| Problem | Probable Cause | Remedy | Page Ref. |
|---|---|---|---|
| 7. The freezing cylinder walls are scored. | a. The scraper blades are damaged. | a. Replace the scraper blades. | 6-2 |
| | b. The front bearing is missing or worn. | b. Install or replace the front bearing. | 6-2 |
| | c. Unit was placed in AUTO before all sanitizing solution was removed from freezing cylinder. | c. Place unit in AUTO only after priming is complete and all sanitizing solution is removed. | 6-4 |
| | d. Broken pins on beater assembly. | d. Repair or replace the beater assembly. Be sure the scraper blades are properly seated on pins. | 6-2 |
| | e. The beater assembly is bent. | e. Call service technician to repair or replace the beater and to correct the cause of insufficient mix in the freezing cylinder. | – – – |
| 8. Excessive mix leakage into the rear drip pan. | a. Worn or missing drive shaft seal. | a. Replace regularly. | 9-1 |
| | b. Inadequate lubrication of drive shaft seal. | b. Lubricate properly. | 6-1 |
| | c. Worn rear shell bearing. | c. Call service technician to replace rear shell bearing. | – – |
| | d. The drive shaft works forward. | d. Call service technician to correct. | – – |
| | e. The seal is installed inside-out on the drive shaft. | e. Install correctly. | 6-1 |
| | f. The wrong type of lubricant is being used (example: petroleum-based lubricant). | f. Use the proper lubricant (example: Taylor Lube). | – – |
| 9. Excessive mix leakage from the door spout. | a. Worn or missing draw valve O-rings. | a. Replace regularly. | 6-2 |
| | b. Inadequate lubrication of the draw valve O-rings. | b. Lubricate properly. | 6-1 |
| | c. The wrong type of lubricant is being used (example: petroleum-based lubricant). | c. Use the proper lubricant (example: Taylor Lube). | – – |
| 10. No freezer operation with the control switch in AUTO. | a. The unit is unplugged (page 1-4). | a. Plug into wall receptacle. | – – |
| | b. Circuit breaker off or blown fuse. | b. Turn circuit breaker on or replace fuse. | – – |
| | c. Beater motor out on reset. | c. Reset the freezer. | 5-1 |
| 11. Low over-run. | a. Worn scraper blade(s). | a. Replace regularly. | 6-1 |
| | b. The mix feed assembly is not installed. | b. Install in mix inlet hole. | 5-2 |
| | c. Product is broken down from over-beating. | c. Draw off some product to allow fresh product to enter the freezing cylinder. | – – |
| 12. The freezer door works loose. | a. The freezer studs are damaged. | a. Call service technician to replace studs. | – – |
| | b. The handscrews are damaged. | b. Replace the handscrews. | – – |
| | c. There are enlarged holes in the freezer door. | c. Replace the door. | – – |
| | d. The handscrews are not tightened. | d. Tighten the handscrews equally in a crisscross pattern. | 6-3 |
| | e. The beater assembly is rubbing the back of the door. | e. Call service technician to correct the problem. | – – |

8

# Section 9 Parts Replacement Schedule

Table 9-1

| Part Description | Every 3 Months | Every 4 Months | Every 6 Months | Annually |
|---|---|---|---|---|
| Scraper Blade | | X | | |
| Drive Shaft Seal | X | | | |
| Drive Shaft O-ring | X | | | |
| Freezer Door Gasket | X | | | |
| Front Bearing | X | | | |
| Draw Valve O-rings | X | | | |
| White Bristle Brush, 3” x 7” | | | Inspect and replace if necessary. | Minimum |
| White Bristle Brush, 9/16” x 38” | | | Inspect and replace if necessary. | Minimum |
| White Bristle Brush, 1-1/2” x 2” | | | Inspect and replace if necessary. | Minimum |
| Black Bristle Brush, 1” x 2” | | | Inspect and replace if necessary. | Minimum |
| Double-Ended Brush | | | Inspect and replace if necessary. | Minimum |

# Notes:

# Section 10 Limited Warranty on Equipment

## TAYLOR COMPANY LIMITED WARRANTY ON FREEZERS

Taylor Company is pleased to provide this limited warranty on new Taylor-branded freezer equipment available from Taylor to the market generally (the “Product”) to the original purchaser only.

## LIMITED WARRANTY

Taylor warrants the Product against failure due to defect in materials or workmanship under normal use and service as follows. All warranty periods begin on the date of original Product installation. If a part fails due to defect during the applicable warranty period, Taylor, through an authorized Taylor distributor or service agency, will provide a new or remanufactured part, at Taylor’s option, to replace the failed defective part at no charge for the part. Except as otherwise stated herein, these are Taylor’s exclusive obligations under this limited warranty for a Product failure. This limited warranty is subject to all provisions, conditions, limitations and exclusions listed below and on the reverse (if any) of this document.

Table 10-1

| Product | Part | Limited Warranty Period |
|---|---|---|
| **Soft Serve** | Insulated Shell Assembly | Five (5) Years |
| **Frozen Yogurt Shakes** | Refrigeration Compressor (except service valve) | Five (5) Years |
| **Smoothies** | Beater Motors | Two (2) Years |
| **Frozen Beverage** | Beater Drive Gear | Two (2) Years |
| **Batch Desserts** | Printed circuit boards and Softech controls beginning with serial number H8024200 | Two (2) Years |
| | Parts Not Otherwise Listed in This Table or Excluded Below | One (1) Years |

## LIMITED WARRANTY CONDITIONS

1. If the date of original installation of the Product cannot be verified, then the limited warranty period begins ninety (90) days from the date of Product manufacture (as indicated by the Product serial number). Proof of purchase may be required at time of service.
2. This limited warranty is valid only if the Product is installed and all required service work on the Product is performed by an authorized Taylor distributor or service agency, and only if genuine, new Taylor parts are used.
3. Installation, use, care, and maintenance must be normal and in accordance with all instructions contained in the Taylor Operator's Manual.
4. Defective parts must be returned to the authorized Taylor distributor or service agency for credit.
5. The use of any refrigerant other than that specified on the Product's data label will void this limited warranty.

## LIMITED WARRANTY EXCEPTIONS

This limited warranty does **not** cover:

1. Labor or other costs incurred for diagnosing, repairing, removing, installing, shipping, servicing, or handling of defective parts, replacement parts, or new Products.

2. Normal maintenance, cleaning, and lubrication as outlined in the Taylor Operator's Manual, including cleaning of condensers.
3. Replacement of wear items designated as Class “000” parts in the Taylor Operator's Manual.
4. External hoses, electrical power supplies, and machine grounding.
5. Parts not supplied or designated by Taylor, or damages resulting from their use.
6. Return trips or waiting time required because a service technician is prevented from beginning warranty service work promptly upon arrival.
7. Failure, damage or repairs due to faulty installation, misapplication, abuse, no or improper servicing, unauthorized alteration or improper operation or use as indicated in the Taylor Operator's Manual, including but not limited to the failure to use proper assembly and cleaning techniques, tools, or approved cleaning supplies.
8. Failure, damage, or repairs due to theft, vandalism, wind, rain, flood, high water, water, lightning, earthquake, or any other natural disaster, fire, corrosive environments, insect or rodent infestation, or other casualty, accident, or condition beyond the reasonable control of Taylor; operation above or below the electrical or water supply specification of the Product; components repaired or altered in any way so as, in the judgment of the Manufacturer, adversely affect performance, or normal wear or deterioration.
9. Any Product purchased over the Internet.
10. Failure to start due to voltage conditions, blown fuses, open circuit breakers, or damages due to the inadequacy or interruption of electrical service.
11. Electricity or fuel costs, or increases in electricity or fuel costs for any reason whatsoever.
12. Damages resulting from the use of any refrigerant other than that specified on the Product's data label will void this limited waranty.
13. Any cost to replace, refill, or dispose of refrigerant, including the cost of refrigerant.
14. **ANY SPECIAL, INDIRECT, OR CONSEQUENTIAL PROPERTY OR COMMERCIAL DAMAGE OF ANY NATURE WHATSOEVER.** Some jurisdictions do not allow the exclusion of incidental or consequential damages, so this limitation may not apply to you.

This limited warranty gives you specific legal rights, and you may also have other rights which vary from jurisdiction to jurisdiction.

### LIMITATION OF WARRANTY

**THIS LIMITED WARRANTY IS EXCLUSIVE AND IS IN LIEU OF ALL OTHER WARRANTIES, CONDITIONS, AND/OR REMEDIES UNDER THE LAW, INCLUDING ANY IMPLIED WARRANTIES OR CONDITIONS OF MERCHANTABILITY OR FITNESS FOR A PARTICULAR PURPOSE. THE ORIGINAL OWNER'S SOLE REMEDY WITH RESPECT TO ANY PRODUCTS SHALL BE REPAIR OR REPLACEMENT OF DEFECTIVE COMPONENTS UNDER THE TERMS OF THIS LIMITED WARRANTY. ALL RIGHTS TO CONSEQUENTIAL OR INCIDENTAL DAMAGES (INCLUDING CLAIMS FOR LOST SALES, LOST PROFITS, PRODUCT LOSS, PROPERTY DAMAGES, OR SERVICE EXPENSES) ARE EXPRESSLY EXCLUDED. THE EXPRESS WARRANTIES MADE IN THIS LIMITED WARRANTY MAY NOT BE ALTERED, ENLARGED, OR CHANGED BY ANY DISTRIBUTOR, DEALER, OR OTHER PERSON, WHATSOEVER.**

### LEGAL REMEDIES

10

The owner **must** notify Taylor in writing by certified or registered letter to the following address of any defect or complaint with the Product, stating the defect or complaint and a specific request for repair, replacement, or other correction of the Product under warranty, mailed at least thirty (30) days before pursuing any legal rights or remedies.

Taylor Company
750 N. Blackhawk Blvd.
Rockton, IL 61072, U.S.A.

## TAYLOR COMPANY LIMITED WARRANTY ON TAYLOR GENUINE PARTS

Taylor Company is pleased to provide this limited warranty on new Taylor genuine replacement components and parts available from Taylor to the market generally (the “Parts”) to the original purchaser only.

## LIMITED WARRANTY

Taylor warrants the Parts against failure due to defect in materials or workmanship under normal use and service as follows. All warranty periods begin on the date of original installation of the Part in the Taylor unit. If a Part fails due to defect during the applicable warranty period, Taylor, through an authorized Taylor distributor or service agency, will provide a new or remanufactured Part, at Taylor’s option, to replace the failed defective Part at no charge for the Part. Except as otherwise stated herein, these are Taylor’s exclusive obligations under this limited warranty for a Part failure. This limited warranty is subject to all provisions, conditions, limitations, and exclusions listed below and on the reverse (if any) of this document.

Table 11-1

| Part's Warranty Class Code or Part | Limited Warranty Period |
|---|---|
| Class 103 Parts[1] | Three (3) Months |
| Class 212 Parts[2] | Twelve (12) Months |
| Class 512 Parts | Twelve (12) Months |
| Class 000 Parts | No Warranty |

## LIMITED WARRANTY CONDITIONS

1. If the date of original installation of the Part cannot be otherwise verified, proof of purchase may be required at time of service.
2. This limited warranty is valid only if the Part is installed and all required service work in connection with the Part is performed by an authorized Taylor distributor or service agency.
3. The limited warranty applies only to Parts remaining in use by their original owner at their original installation location in the unit of original installation.
4. Installation, use, care, and maintenance must be normal and in accordance with all instructions contained in the Taylor Operator's Manual.
5. Defective Parts must be returned to the authorized Taylor distributor or service agency for credit.
6. This warranty is not intended to shorten the length of any warranty coverage provided pursuant to a separate Taylor limited warranty on freezer or grill equipment.
7. The use of any refrigerant other than that specified for the unit in which the Part is installed will void this limited warranty.

[1, 2] Except that Taylor Part #032129SER2 (Compressor-Air-230V SERV) and Taylor Part #075506SER1 (Compressor-Air-115V 60HZ) shall have a limited warranty period of twelve (12) months when used in Taylor freezer equipment and a limited warranty period of two (2) years when used in Taylor grill equipment.

## LIMITED WARRANTY EXCEPTIONS

This limited warranty does **not** cover:

1. Labor or other costs incurred for diagnosing, repairing, removing, installing, shipping, servicing, or handling of defective Parts, replacement Parts, or new Parts.
2. Normal maintenance, cleaning, and lubrication as outlined in the Taylor Operator's Manual, including cleaning of condensers or carbon and grease buildup.
3. Required service, whether cleaning or general repairs, to return the cooking surface assemblies, including the upper platen and lower plate, to an operational condition to achieve proper cooking or allow proper assembly of release sheets and clips as a result of grease buildup on the cooking surfaces, including but not limited to the platen and plate, sides of the shroud, or top of the shroud.
4. Replacement of cooking surfaces, including the upper platen and lower plate, due to pitting or corrosion (or in the case of the upper platen, due to loss of plating) as a result of damage due to the impact of spatulas or other small wares used during the cooking process or as a result of the use of cleaners, cleaning materials, or cleaning processes not approved for use by Taylor.
5. Replacement of wear items designated as Class “000” Parts in the Taylor Operator's Manual, as well as any release sheets and clips for the Product's upper platen assembly.
6. External hoses, electrical power supplies, and machine grounding.
7. Parts not supplied or designated by Taylor, or damages resulting from their use.
8. Return trips or waiting time required because a service technician is prevented from beginning warranty service work promptly upon arrival.
9. Failure, damage, or repairs due to faulty installation, misapplication, abuse, no or improper servicing, unauthorized alteration or improper operation or use as indicated in the Taylor Operator's Manual, including but not limited to the failure to use proper assembly and cleaning techniques, tools, or approved cleaning supplies.
10. Failure, damage or repairs due to theft, vandalism, wind, rain, flood, high water, water, lightning, earthquake, or any other natural disaster, fire, corrosive environments, insect or rodent infestation, or other casualty, accident or condition beyond the reasonable control of Taylor; operation above or below the gas, electrical, or water supply specification of the unit in which a part is installed; Parts or the units in which they are installed repaired or altered in any way so as, in the judgment of Taylor, adversely affect performance, or normal wear or deterioration.
11. Any Part purchased over the Internet.
12. Failure to start due to voltage conditions, blown fuses, open circuit breakers, or damages due to the inadequacy or interruption of electrical service.
13. Electricity, gas, or other fuel costs, or increases in electricity or fuel costs for any reason whatsoever.
14. Damages resulting from the use of any refrigerant other than that specified for the unit in which the Part is installed will void this limited warranty.
15. Any cost to replace, refill, or dispose of refrigerant, including the cost of refrigerant.
16. **ANY SPECIAL, INDIRECT, OR CONSEQUENTIAL PROPERTY OR COMMERCIAL DAMAGE OF ANY NATURE WHATSOEVER.** Some jurisdictions do not allow the exclusion of incidental or consequential damages, so this limitation may not apply to you.

This limited warranty gives you specific legal rights, and you may also have other rights which vary from jurisdiction to jurisdiction.

### LIMITATION OF WARRANTY

**THIS LIMITED WARRANTY IS EXCLUSIVE AND IS IN LIEU OF ALL OTHER WARRANTIES, CONDITIONS, AND/OR REMEDIES UNDER THE LAW, INCLUDING ANY IMPLIED WARRANTIES OR CONDITIONS OF MERCHANTABILITY OR FITNESS FOR A PARTICULAR PURPOSE. THE ORIGINAL OWNER'S SOLE REMEDY WITH RESPECT TO ANY PRODUCTS SHALL BE REPAIR OR REPLACEMENT OF DEFECTIVE PARTS UNDER THE TERMS OF THIS LIMITED WARRANTY. ALL RIGHTS TO CONSEQUENTIAL OR INCIDENTAL DAMAGES, (INCLUDING CLAIMS FOR LOST SALES, LOST PROFITS, PRODUCT LOSS, PROPERTY DAMAGES OR SERVICE EXPENSES) ARE EXPRESSLY EXCLUDED. THE EXPRESS WARRANTIES MADE IN THIS LIMITED WARRANTY MAY NOT BE ALTERED, ENLARGED, OR CHANGED BY ANY DISTRIBUTOR, DEALER, OR OTHER PERSON, WHATSOEVER.**

### LEGAL REMEDIES

The owner **must** notify Taylor in writing by certified or registered letter to the following address of any defect or complaint with the Part, stating the defect or complaint and a specific request for repair, replacement, or other correction of the Part under warranty, mailed at least thirty (30) days before pursuing any legal rights or remedies.

Taylor Company
750 N. Blackhawk Blvd.
Rockton, IL 61072, U.S.A.

# Notes: